Circuit Analysis
EE2101

Week 11-Sinusoidal Steady-State Analysis
Dr YAN Yamin

Lecture notes adapted from Dr Soh Cheong Boon

Overview

- Basic Approach
- Nodal Analysis
- Mesh Analysis
- Superposition Theorem
- Source Transformation
- Thevenin and Norton Equivalent Circuits
  - (All these techniques were already introduced for DC circuits. We will illustrate their applications to AC circuits with examples.)
- Op-amps AC Circuits

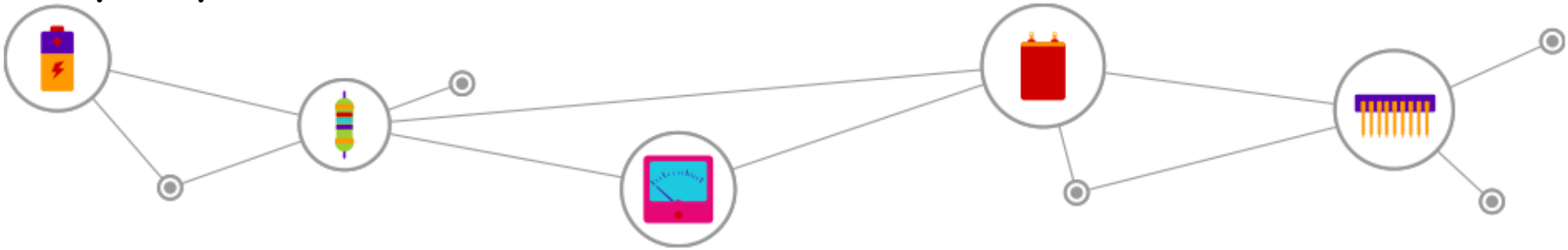

By the end of this lesson, you should be able to…

- Explain how nodal and mesh analysis can be applied to AC circuit analysis.
- Explain how superposition theorem can be applied to AC circuit analysis.
- Explain how source transformation can be applied to AC circuit analysis.
- Explain the key characteristics of Thevenin and Norton equivalent circuits for AC circuits.
- Explain the key characteristics of op-amps AC circuits.

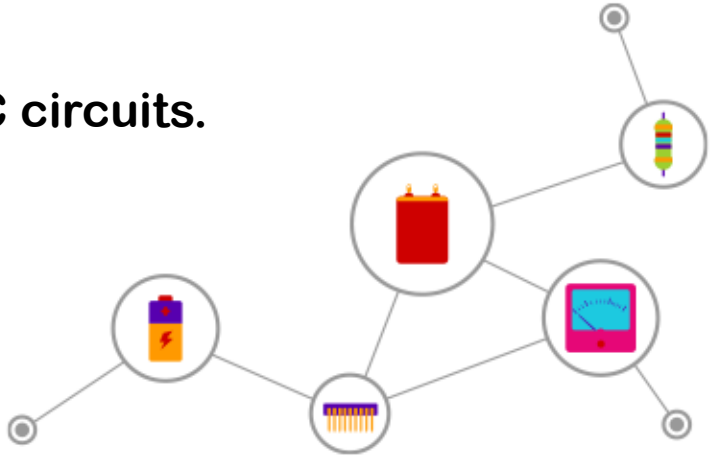

Basic Approach

Basic Approach

Steps to analyse AC circuits:

1. **Transform** the circuit to the **phasor or frequency domain**.

Time Domain to Frequency Domain

2. **Solve** the problem using circuit techniques (nodal analysis, mesh analysis, superposition, etc.)

Solve Problem in Frequency Domain

3. **Transform** the resulting phasor to the time domain.

Frequency Domain to Time Domain

Nodal Analysis

Nodal Analysis: Example 1

The basis of nodal analysis is KCL.

Using nodal analysis, find i_x.

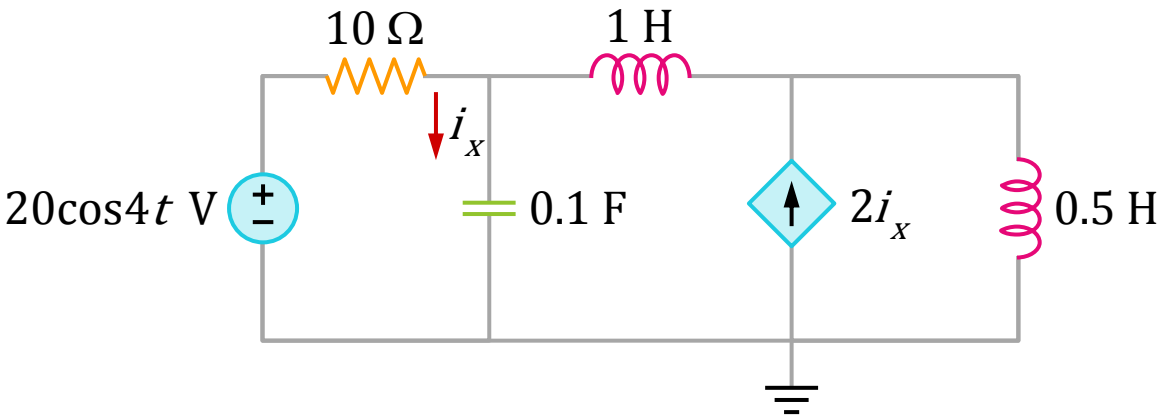

Nodal Analysis: Example 1

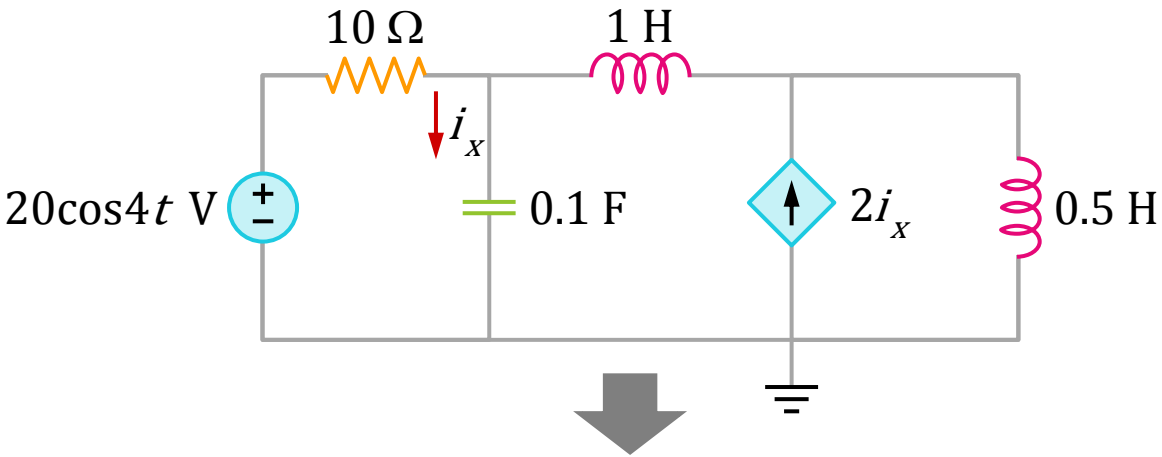

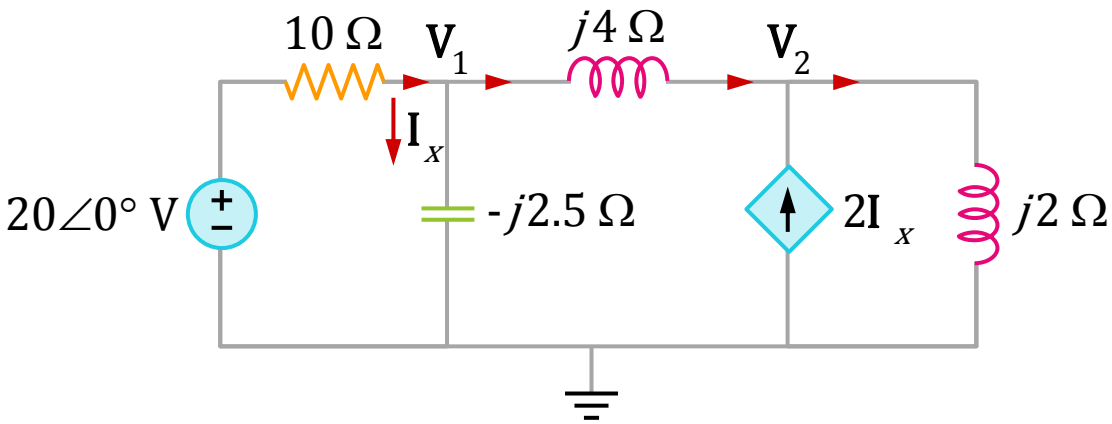

Nodal Analysis: Example 1

KCL at node 1

$$\frac{20-\mathbf{V}_1}{10}=\frac{\mathbf{V}_1}{-j2.5}+\frac{\mathbf{V}_1-\mathbf{V}_2}{j4}$$

$$(1+j1.5)\mathbf{V}_1+j2.5\mathbf{V}_2=20$$

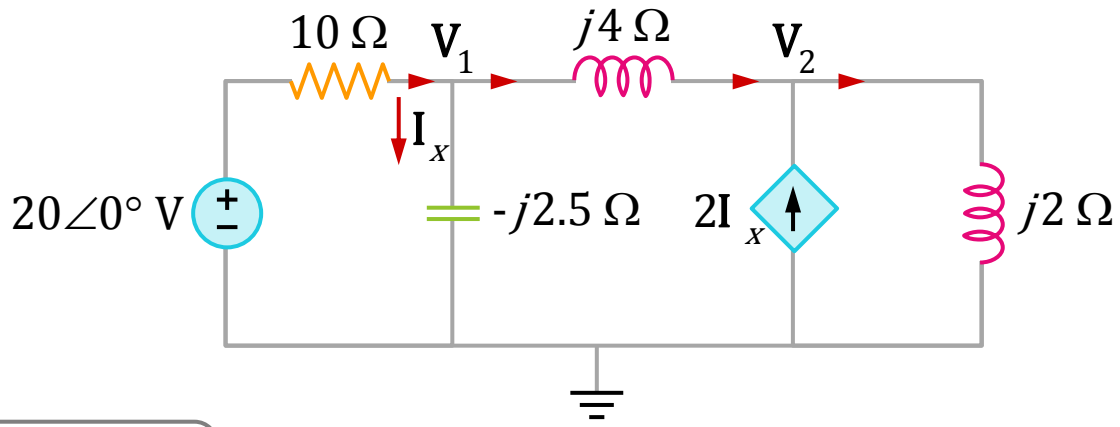

KCL at node 2, and with $\mathbf{I}_x=\frac{\mathbf{V}_1}{-j2.5}$

$$2\mathbf{I}_x+\frac{\mathbf{V}_1-\mathbf{V}_2}{j4}=\frac{\mathbf{V}_2}{j2}$$

$$11\mathbf{V}_1+15\mathbf{V}_2=0$$

Nodal Analysis: Example 1

Solving using Cramer's rule (Textbook Appendix A)

$$(1+j1.5)\mathbf{V}_1 + j2.5\mathbf{V}_2 = 20$$

$$11\mathbf{V}_1 + 15\mathbf{V}_2 = 0$$

$$\begin{bmatrix} 1+j1.5 & j2.5 \\ 11 & 15 \end{bmatrix}\begin{bmatrix} \mathbf{V}_1 \\ \mathbf{V}_2 \end{bmatrix} = \begin{bmatrix} 20 \\ 0 \end{bmatrix}$$

$$\mathbf{V}_1 = \frac{\begin{vmatrix} 20 & j2.5 \\ 0 & 15 \end{vmatrix}}{\begin{vmatrix} 1+j1.5 & j2.5 \\ 11 & 15 \end{vmatrix}} = \frac{300}{15-j5} = 18.97\angle 18.43^o \text{ V}$$

$$\mathbf{V}_2 = \frac{\begin{vmatrix} 1+j1.5 & 20 \\ 11 & 0 \end{vmatrix}}{15-j5} = \frac{-220}{15-j5} = 13.91\angle 198.3^o \text{ V}$$

Therefore, $\mathbf{I}_x = \dfrac{\mathbf{V}_1}{(-j2.5)} = 7.59\angle 108.4^o \text{ A}$

Transforming into time domain $i_x = 7.59\cos(4t + 108.4^o)\text{A}$

Nodal Analysis: Example 2

Compute V_1 and V_2.

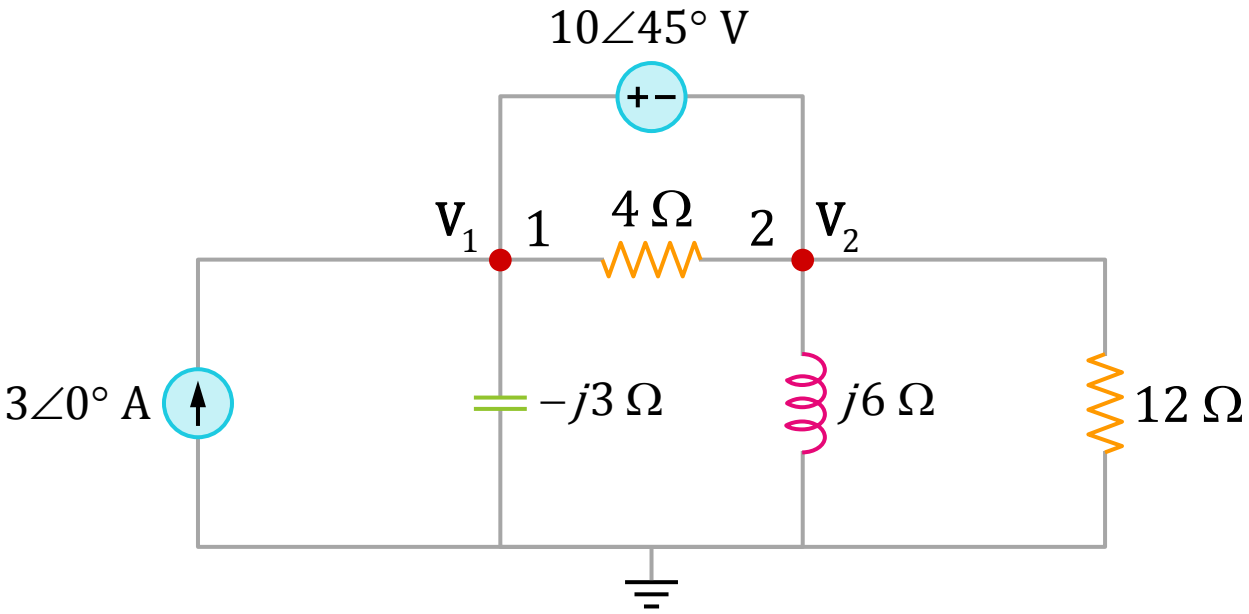

Nodal Analysis: Example 2

Nodes 1 and 2 form a supernode.

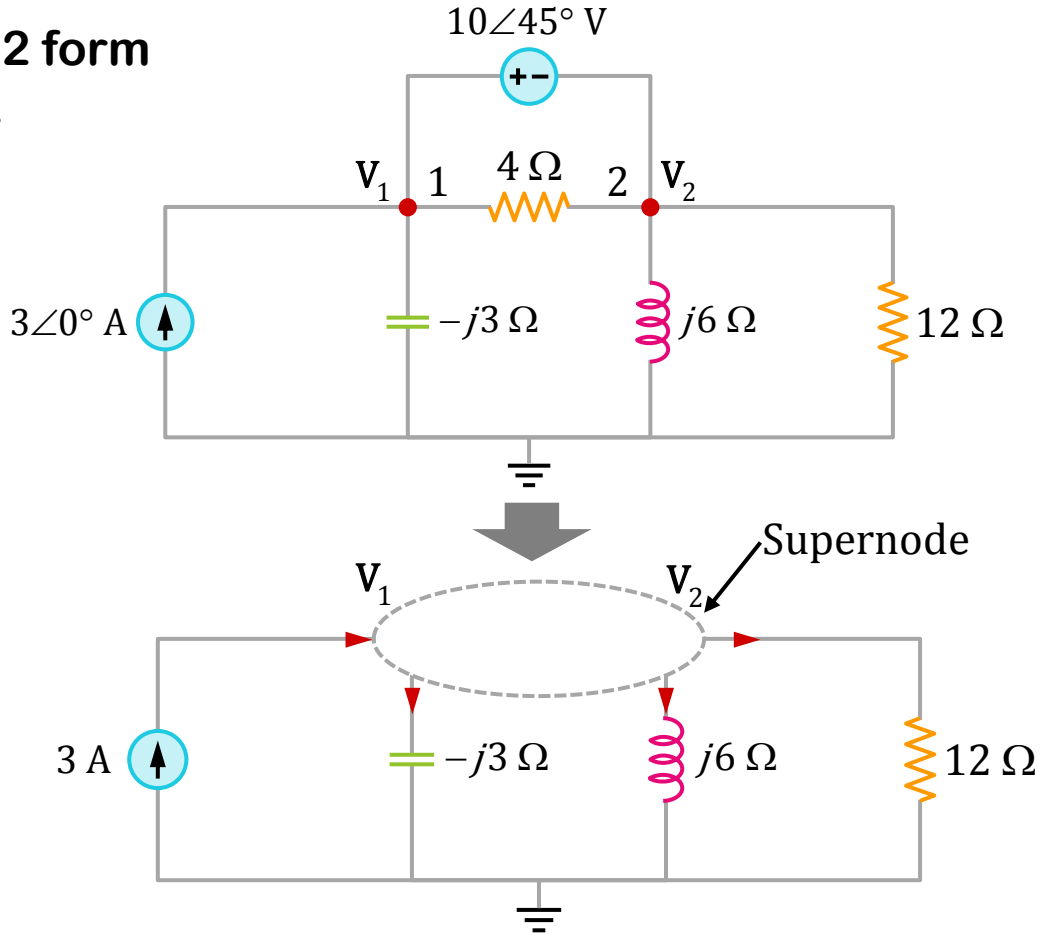

Nodal Analysis: Example 2

KCL to supernode

$$3 = \frac{\mathbf{V}_1}{-j3} + \frac{\mathbf{V}_2}{j6} + \frac{\mathbf{V}_2}{12}$$

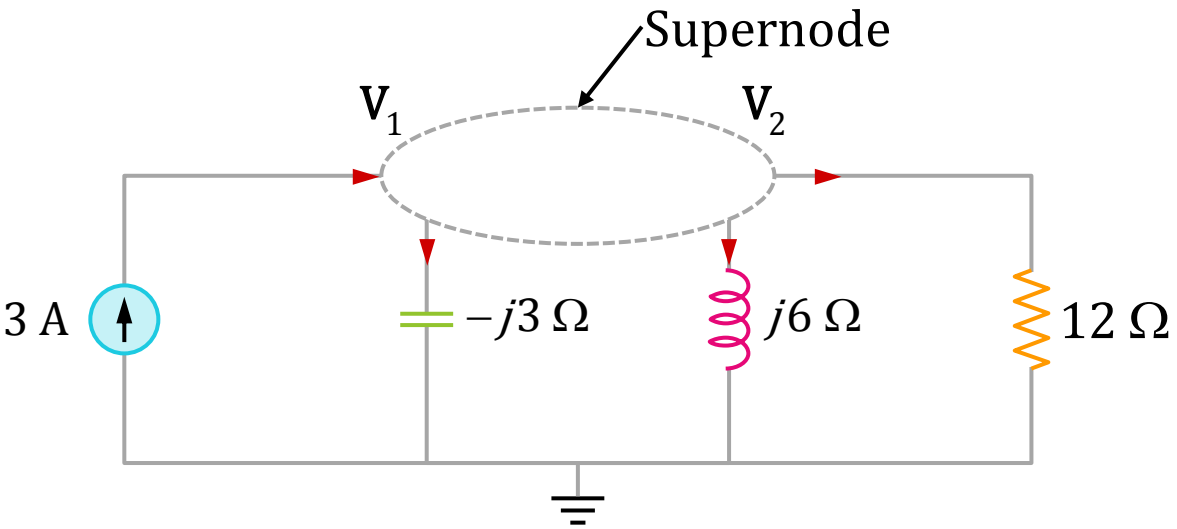

KVL to supernode

$$\mathbf{V}_1 = \mathbf{V}_2 + 10\angle 45^o$$

Solving

$$\mathbf{V}_1 = 25.78\angle\left(-70.48^o\right)\text{V}$$

$$\mathbf{V}_2 = 31.41\angle\left(-87.18^o\right)\text{V}$$

Mesh Analysis

Mesh Analysis: Example 1

The basis of mesh analysis is KVL.

Find I_o using mesh analysis.

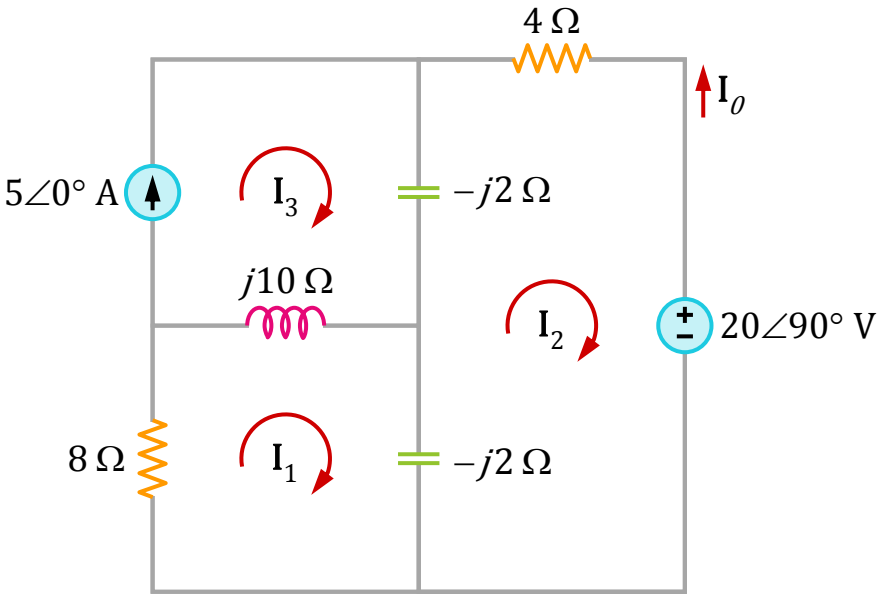

Mesh Analysis: Example 1

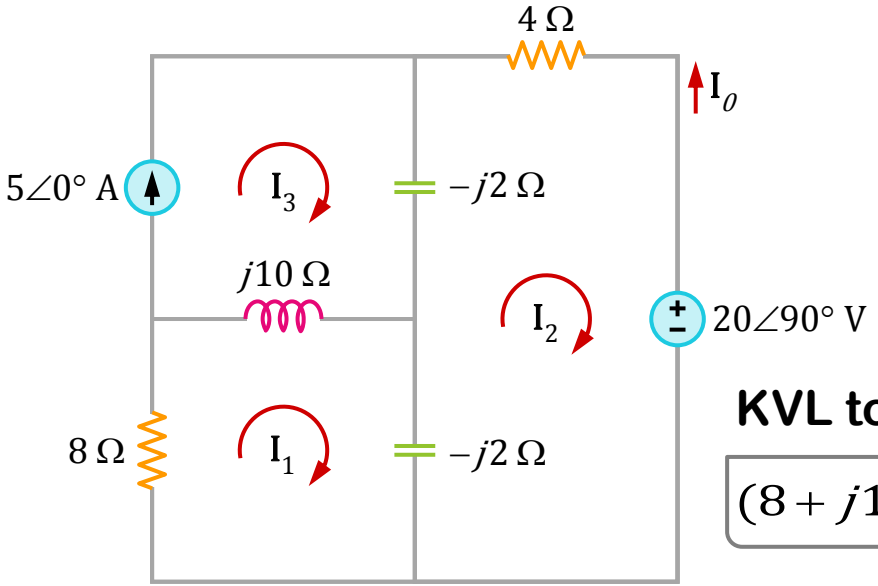

KVL to mesh 1

$$(8 + j10 - j2)\mathbf{I}_1 - (-j2)\mathbf{I}_2 - j10\mathbf{I}_3 = 0$$

KVL to mesh 2

$$(4 - j2 - j2)\mathbf{I}_2 - (-j2)\mathbf{I}_1 - (-j2)\mathbf{I}_3 + 20\angle 90^o = 0$$

KVL to mesh 3 $\mathbf{I}_3 = 5\angle 0^o$

Mesh Analysis: Example 1

Simplifying

$$(8+j8)\mathbf{I}_1 + j2\mathbf{I}_2 = j50$$

$$j2\mathbf{I}_1 + (4-j4)\mathbf{I}_2 = -j30$$

$$\begin{bmatrix} 8+j8 & j2 \\ j2 & 4-j4 \end{bmatrix} \begin{bmatrix} \mathbf{I}_1 \\ \mathbf{I}_2 \end{bmatrix} = \begin{bmatrix} j50 \\ -j30 \end{bmatrix}$$

Solving using Cramer's rule

$$\mathbf{I}_2 = \frac{\begin{vmatrix} 8+j8 & j50 \\ j2 & -j30 \end{vmatrix}}{\begin{vmatrix} 8+j8 & j2 \\ j2 & 4-j4 \end{vmatrix}} = \frac{340-j240}{68} = 6.12\angle -35.22^o \text{ A}$$

The desired current is $\mathbf{I}_o = -\mathbf{I}_2 = 6.12\angle 144.78^o \text{ A}$

Mesh Analysis: Example 2

Find V_0 using mesh analysis.

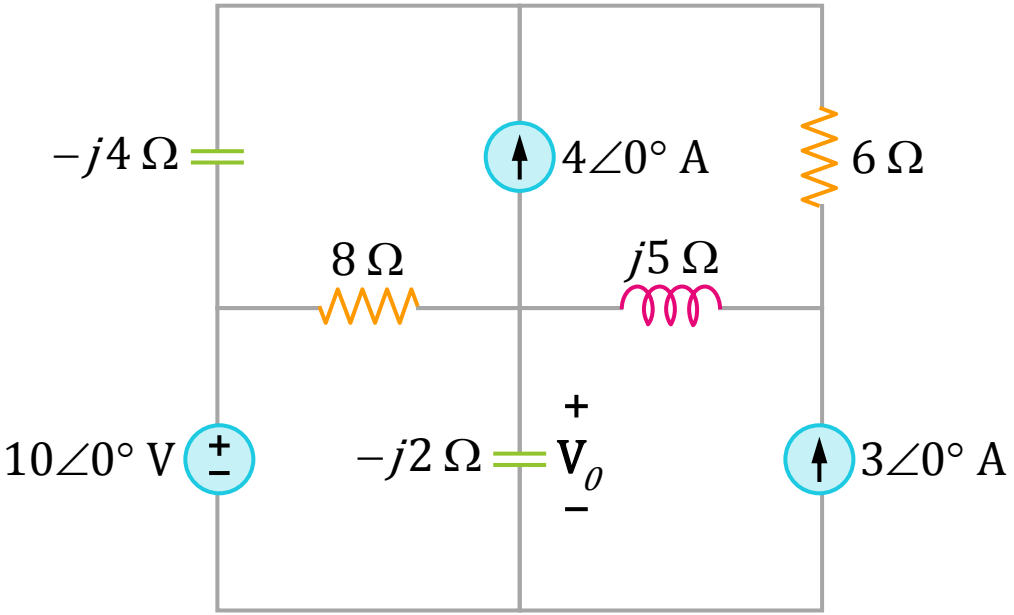

Mesh Analysis: Example 2

Meshes 3 and 4 form a supermesh due to the current source between the meshes.

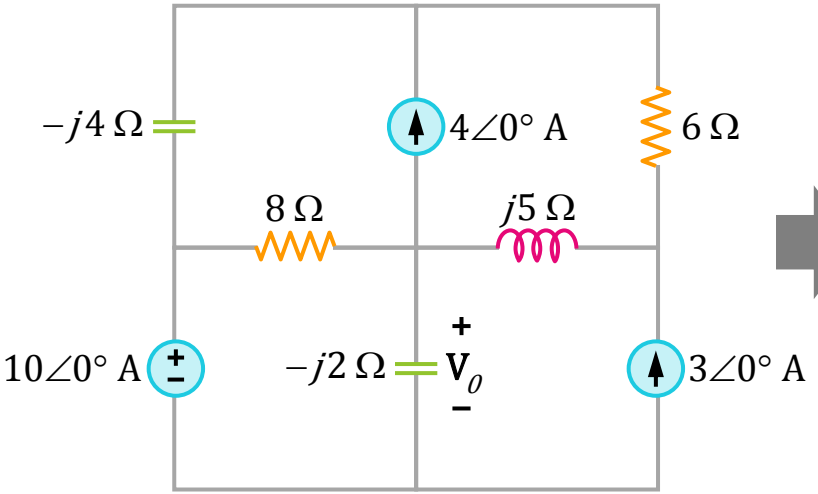

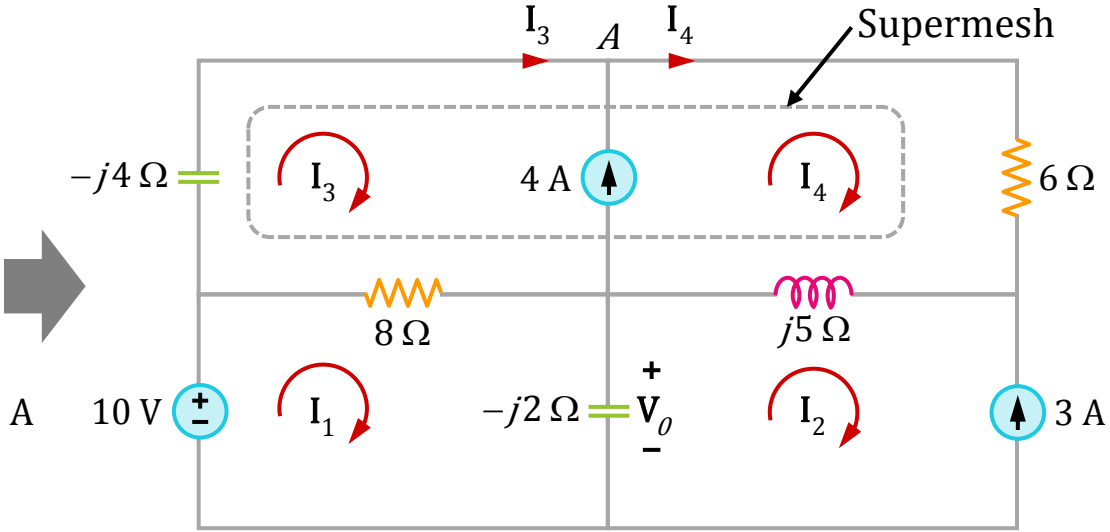

Mesh Analysis: Example 2

KVL to mesh 1

$$-10+(8-j2)\mathbf{I}_1-(-j2)\mathbf{I}_2-8\mathbf{I}_3=0$$

KVL to mesh 2

$$\mathbf{I}_2=-3$$

KVL for the supermesh

$$(8-j4)\mathbf{I}_3-8\mathbf{I}_1+(6+j5)\mathbf{I}_4-j5\mathbf{I}_2=0$$

Due to current source between meshes 3 and 4, at node A

$$\mathbf{I}_4=\mathbf{I}_3+4$$

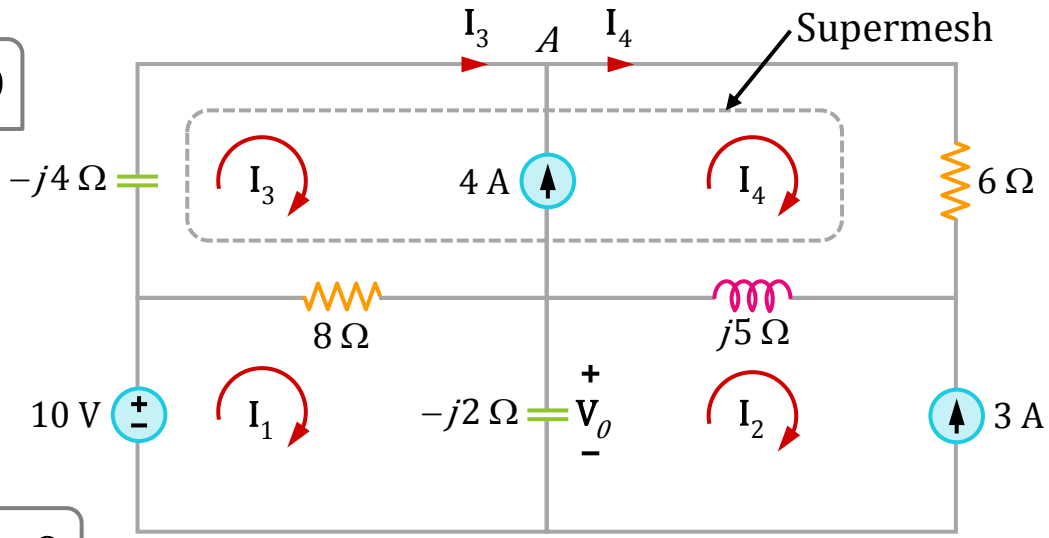

Mesh Analysis: Example 2

Simplifying

$$(8-j2)\mathbf{I}_1 - 8\mathbf{I}_3 = 10 + j6$$

$$-8\mathbf{I}_1 + (14+j)\mathbf{I}_3 = -24 - j35$$

$$\begin{bmatrix} 8-j2 & -8 \\ -8 & 14+j \end{bmatrix} \begin{bmatrix} \mathbf{I}_1 \\ \mathbf{I}_3 \end{bmatrix} = \begin{bmatrix} 10+j6 \\ -24-j35 \end{bmatrix}$$

Solving using Cramer's rule

$$\mathbf{I}_1 = \frac{\begin{vmatrix} 10+j6 & -8 \\ -24-j35 & 14+j \end{vmatrix}}{\begin{vmatrix} 8-j2 & -8 \\ -8 & 14+j \end{vmatrix}} = \frac{-58-j186}{50-j20} = 3.618\angle 274.5^o \text{ A}$$

The desired voltage is $\mathbf{V}_o = -j2(\mathbf{I}_1 - \mathbf{I}_2) = 9.756\angle 222.32^o \text{ V}$

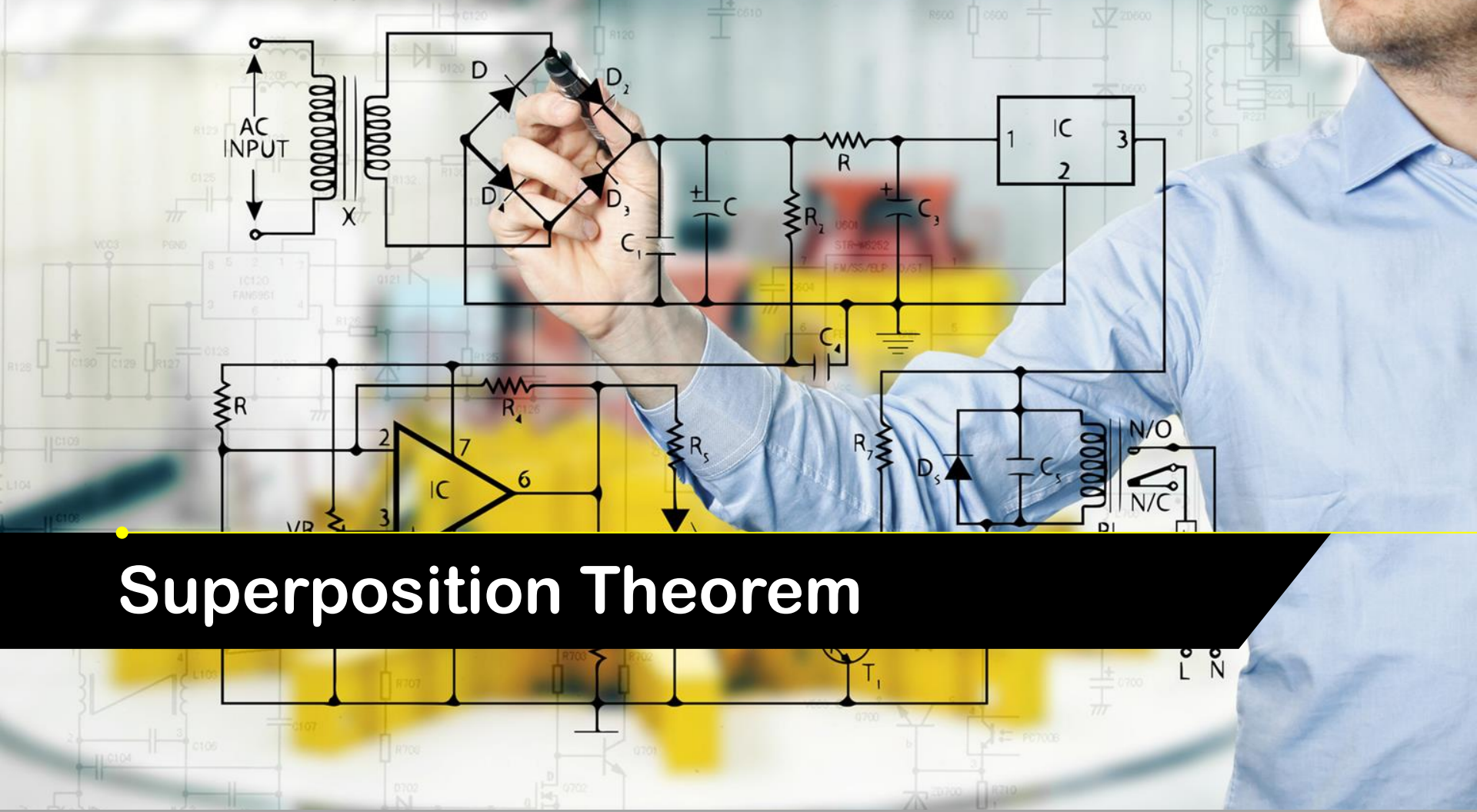

Superposition Theorem

Superposition Theorem

When a circuit has sources operating at different frequencies,

- Solve the different phasor circuits for each different frequency independently, and obtain individual time-domain responses.
- The total response is the sum of all the individual time-domain responses.

Superposition Theorem: Example 1

Find $\mathbf{I}_o$ using superposition theorem for this circuit.

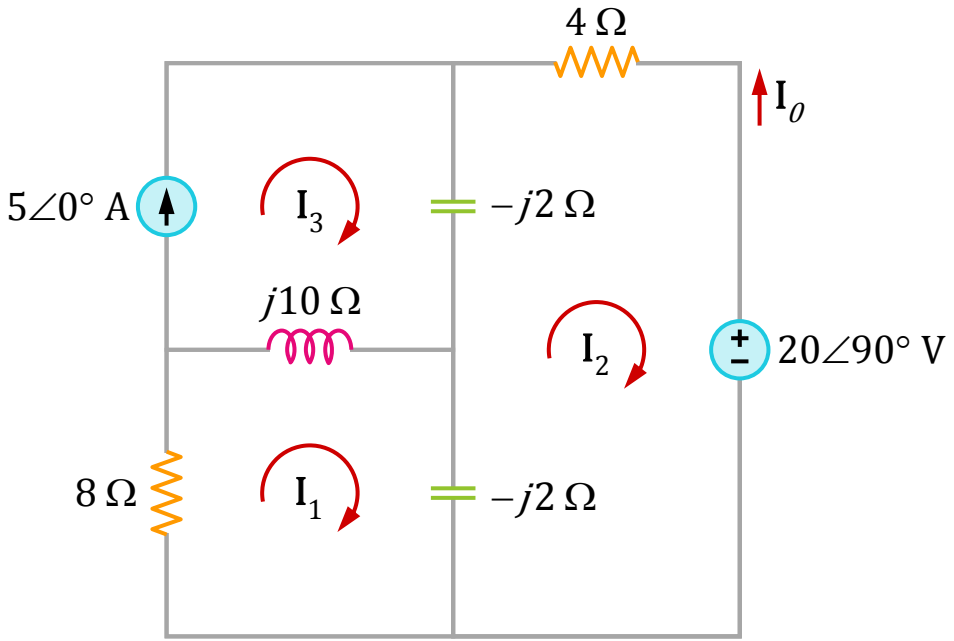

Let $\boxed{\mathbf{I}_o = \mathbf{I}_o^{'} + \mathbf{I}_o^{''}}$

Where, $\mathbf{I}_o^{'}$ is due to the voltage source.

Where, $\mathbf{I}_o^{''}$ is due to the current source.

Superposition Theorem: Example 1

To get $\mathbf{I}_o^{'}$

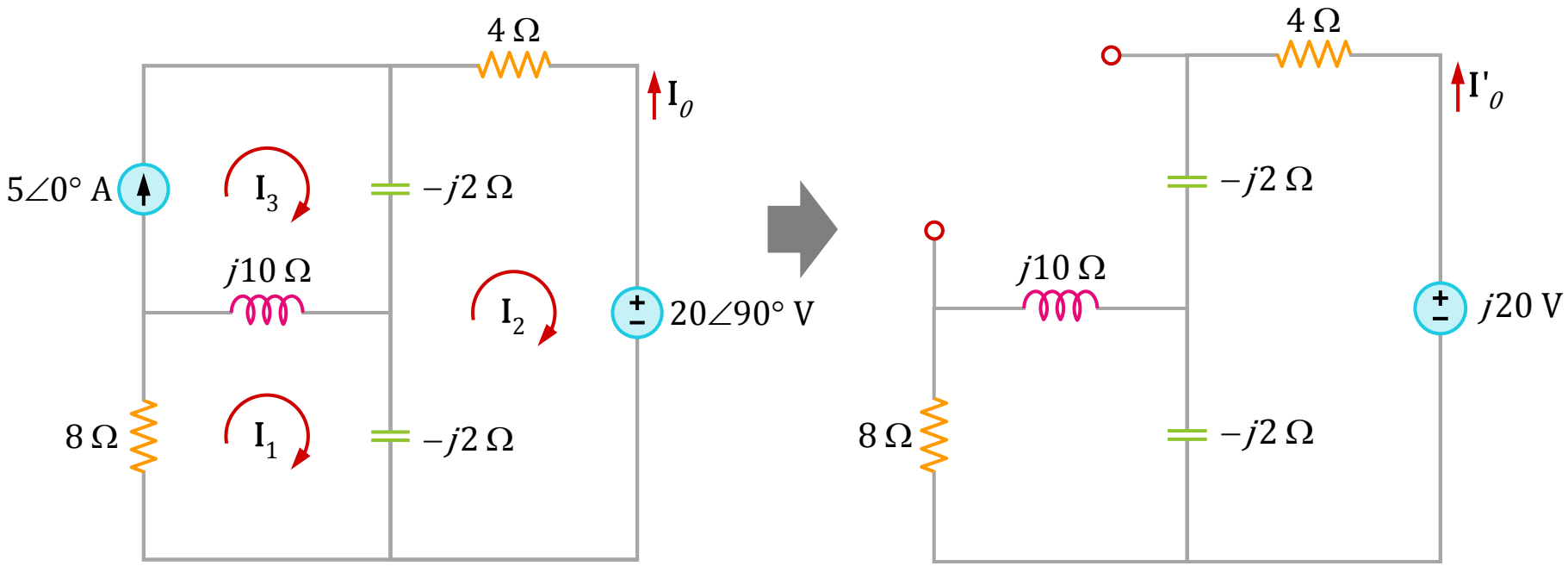

Superposition Theorem: Example 1

To get $\mathbf{I}_o^{'}$

$$\mathbf{Z} = (-j2) \| (8 + j10) = 0.25 - j2.25$$

Then

$$\mathbf{I}_o^{'} = \frac{j20}{4 - j2 + \mathbf{Z}}$$

$$\mathbf{I}_o^{'} = -2.353 + j2.353$$

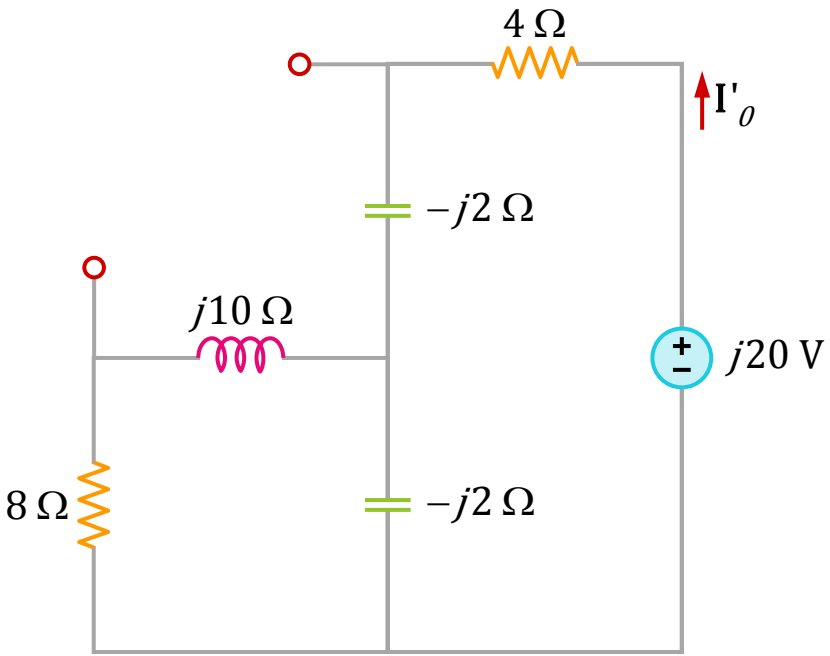

Superposition Theorem: Example 1

To get $\mathbf{I}''_o$

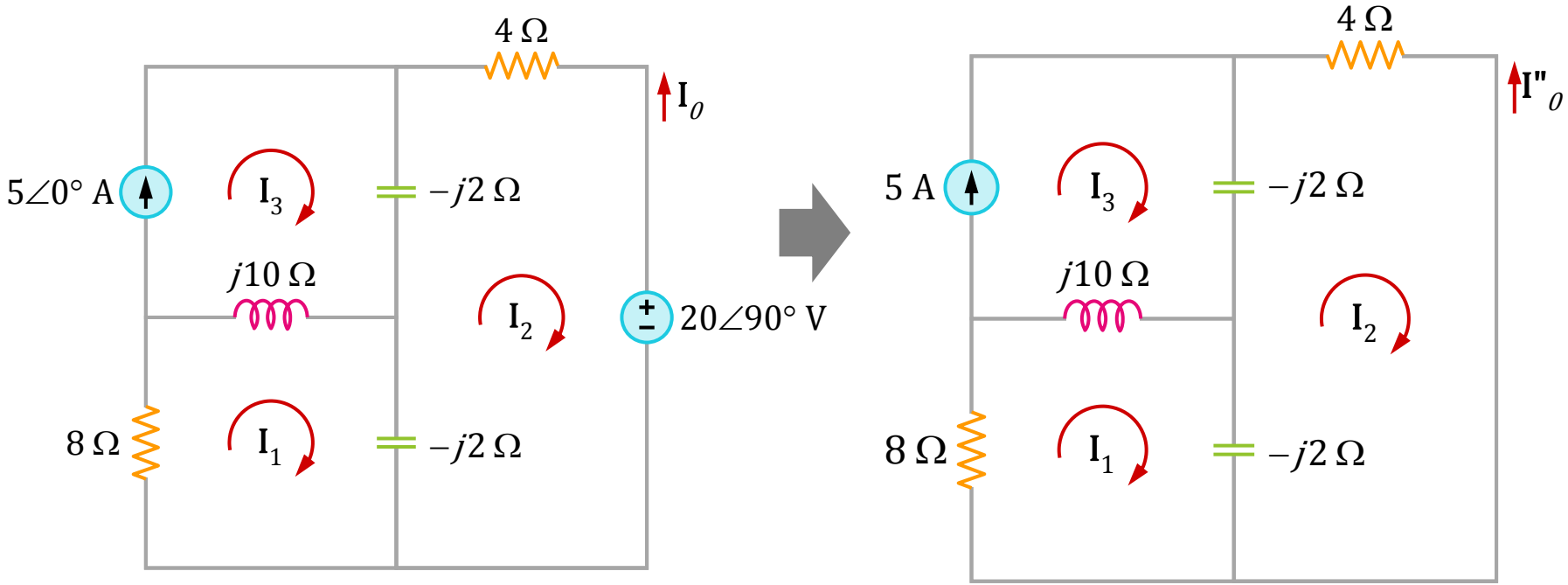

Superposition Theorem: Example 1

To get $\mathbf{I}_o''$

Mesh 1 gives

$$(8+j8)\mathbf{I}_1 - j10\mathbf{I}_3 + j2\mathbf{I}_2 = 0$$

Mesh 2 gives

$$(4-j4)\mathbf{I}_2 + j2\mathbf{I}_1 + j2\mathbf{I}_3 = 0$$

Mesh 3 gives

$$\mathbf{I}_3 = 5$$

Solving $\mathbf{I}_2 = 2.647 - j1.176$ $\quad \mathbf{I}_o'' = -\mathbf{I}_2$

$$\mathbf{I}_o = \mathbf{I}_o' + \mathbf{I}_o'' = 6.12\angle 144.78^o \text{ A}$$

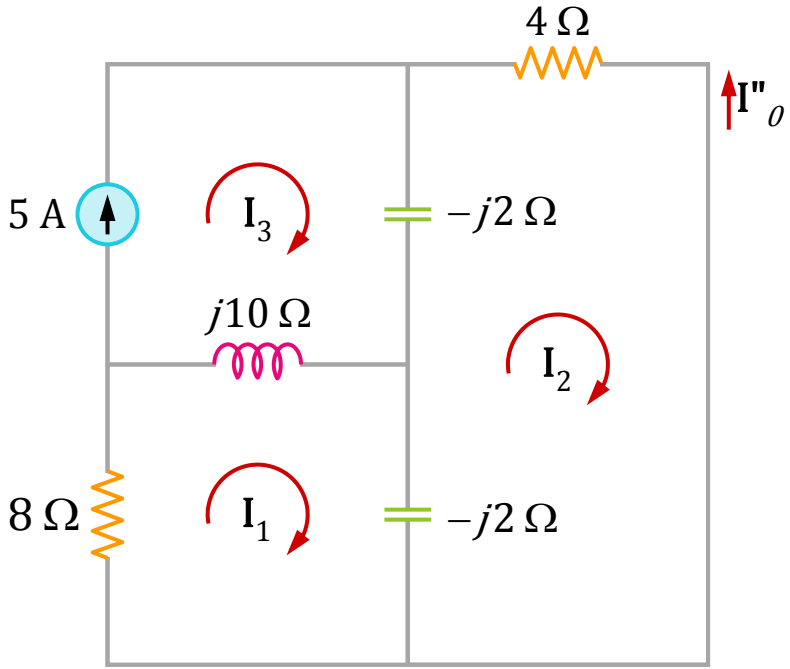

Superposition Theorem: Example 2

Calculate v_o for this circuit using the superposition theorem.

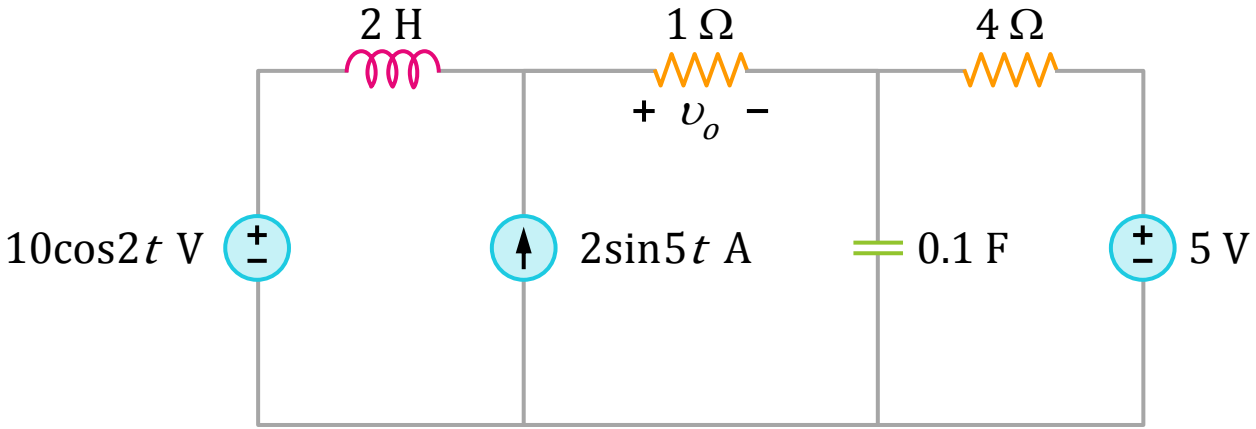

The circuit operates in 3 frequencies: $\omega = 0$ (DC) | $\omega = 2$ | $\omega = 5$

Superposition Theorem: Example 2

To find v_1 due to the $5\ \mathrm{V}$ DC source

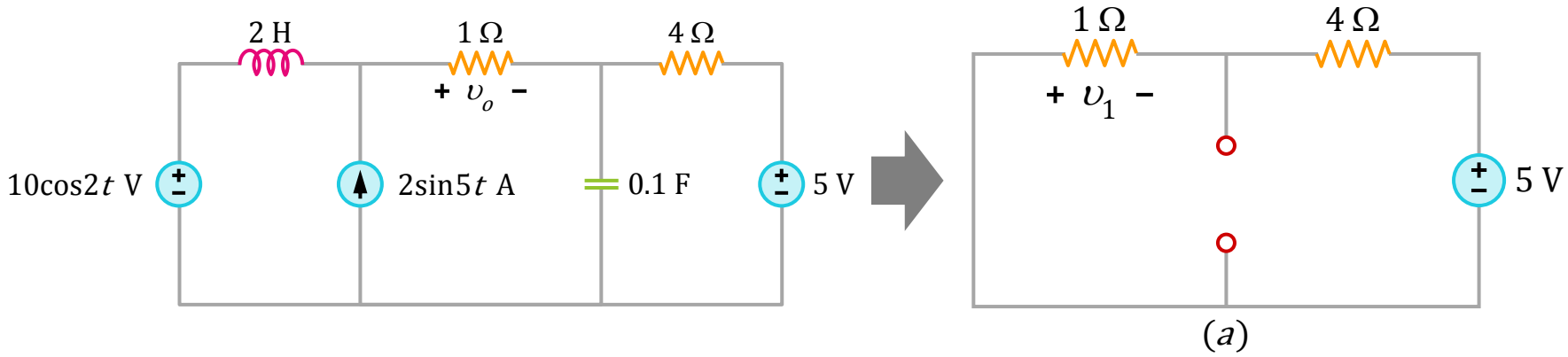

$$-v_1 = \frac{1}{1+4}(5) = 1\,\mathrm{V}$$

Superposition Theorem: Example 2

To find v_2 due to the $10\cos 2t$ source

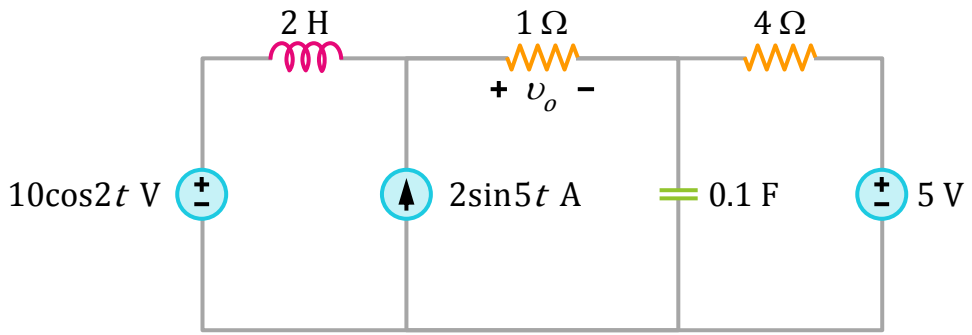

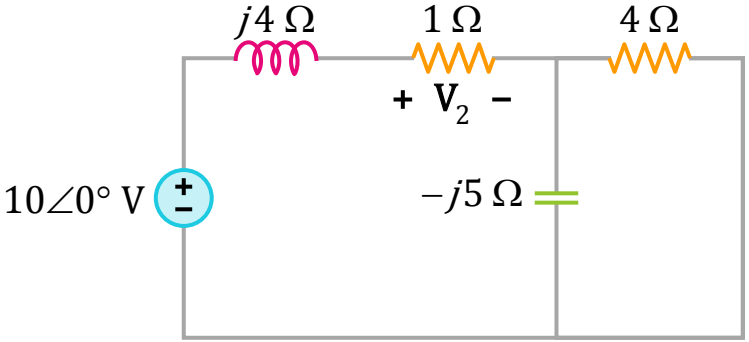

(b)

$$\mathbf{Z} = -j5 \,||\, 4 = 2.439 - j1.951$$

$$\mathbf{V}_2 = \frac{1}{1 + j4 + \mathbf{Z}}(10\angle 0^o) \rightarrow \mathbf{V}_2 = 2.498\angle -30.79^o$$

$$v_2 = 2.498\cos(2t - 30.79^o)\ \text{V}$$

Superposition Theorem: Example 2

To find V_3 due to the $2\sin 5t$ current source

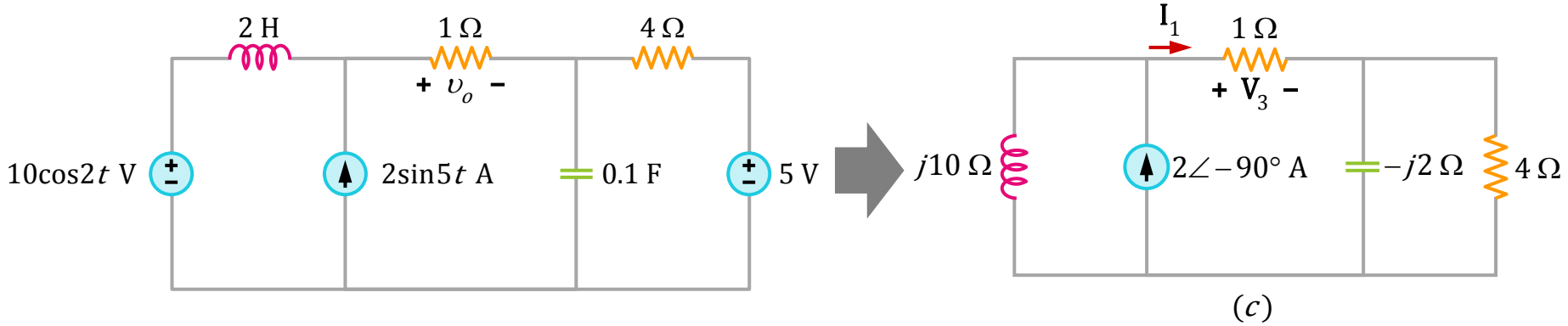

Superposition Theorem: Example 2

$$\mathbf{Z}_1 = -j2 \,||\, 4 = 0.8 - j1.6$$

$$\mathbf{I}_1 = \frac{j10}{j10 + 1 + \mathbf{Z}_1}(2\angle -90^o)$$

$$\mathbf{V}_3 = \mathbf{I}_1(1) = 2.328\angle -80^o$$

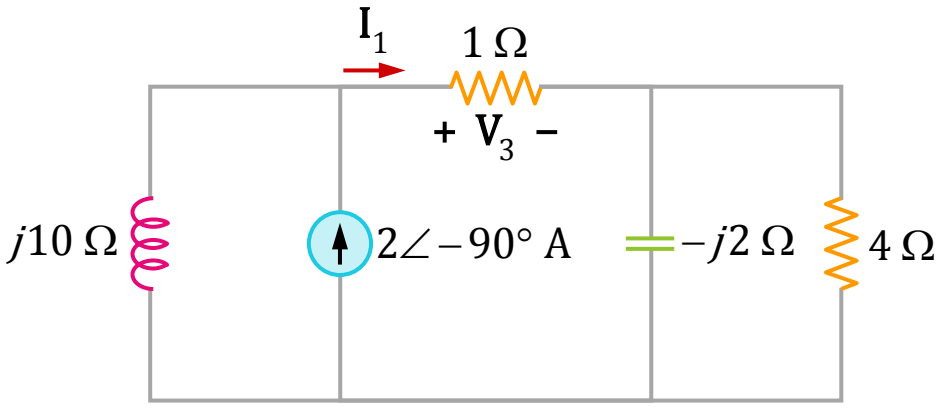

(c)

$$v_3 = 2.328\cos(5t - 80^o)$$

$$v_3 = 2.328\sin(5t + 10^o)\text{V}$$

$$v_o = v_1 + v_2 + v_3$$

$$v_o(t) = -1 + 2.498\cos(2t - 30.79^o) + 2.328\sin(5t + 10^o)\text{ V}$$

Source Transformation

Source Transformation

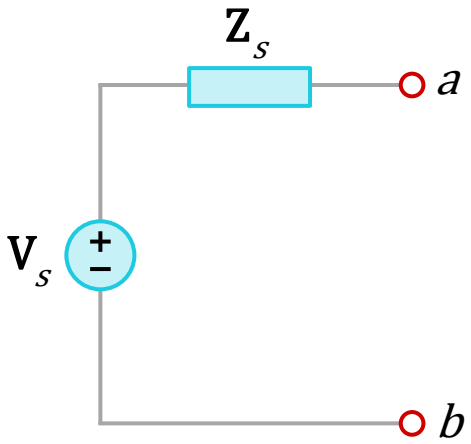

$$V_s = Z_s I_s$$

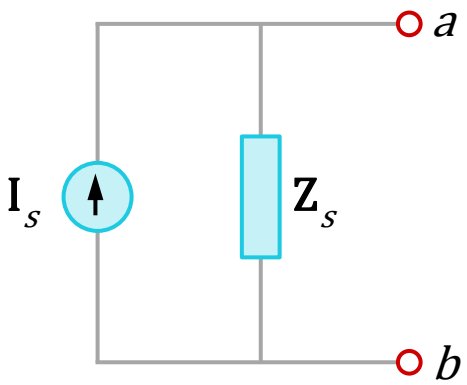

$$I_s = \frac{V_s}{Z_s}$$

Source transformation in the frequency domain involves transforming **a voltage source in series with an impedance to a current source in parallel with an impedance**, or vice versa.

Source Transformation: Example 1

Find $\mathbf{V}_x$ using the method of source transformation.

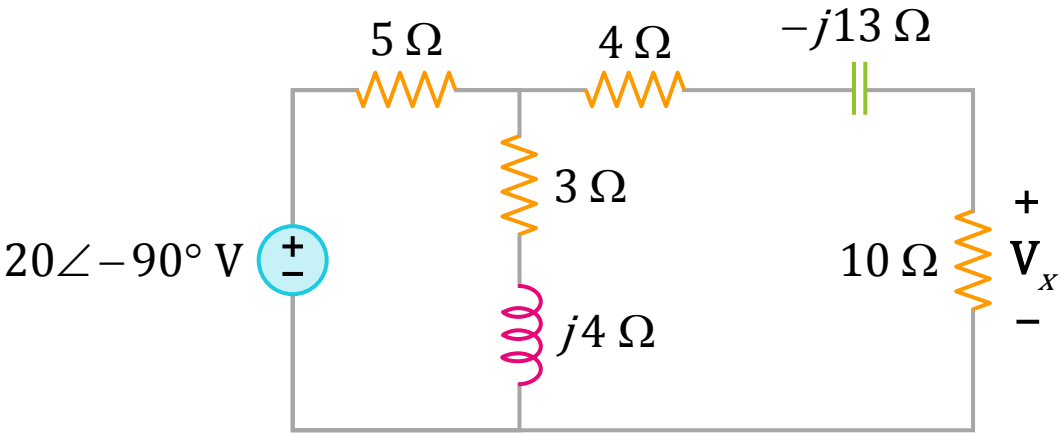

Source Transformation: Example 1

Transform the voltage source to a current source

$$\mathbf{I}_s = \frac{20\angle -90^o}{5} = -j4 \text{ A}$$

$$\mathbf{Z}_1 = \frac{5(3+j4)}{8+j4} = 2.5 + j1.25\ \Omega$$

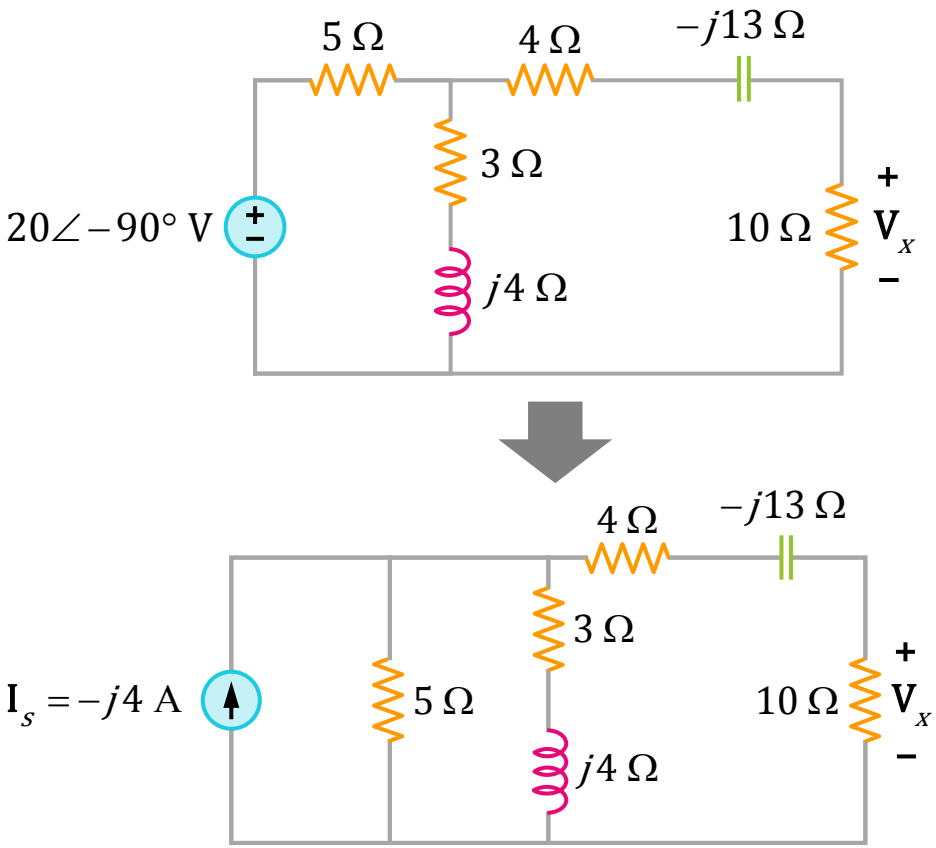

(a)

Source Transformation: Example 1

Transform the current source to a voltage source

$$\mathbf{V}_s = \mathbf{I}_s \mathbf{Z}_1 = 5 - j10 \text{ V}$$

$$\mathbf{V}_x = \frac{10}{10 + 2.5 + j1.25 + 4 - j13} \mathbf{V}_s$$

$$\mathbf{V}_x = 5.519\angle -28^o \text{ V}$$

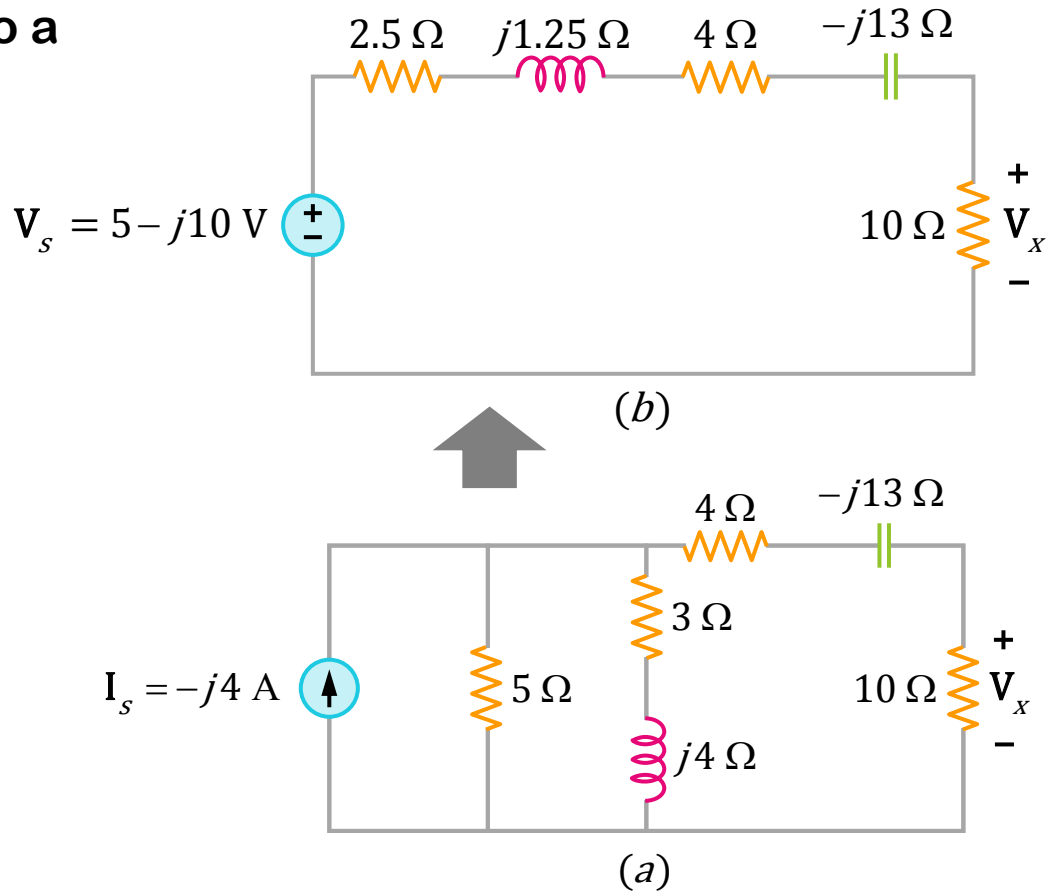

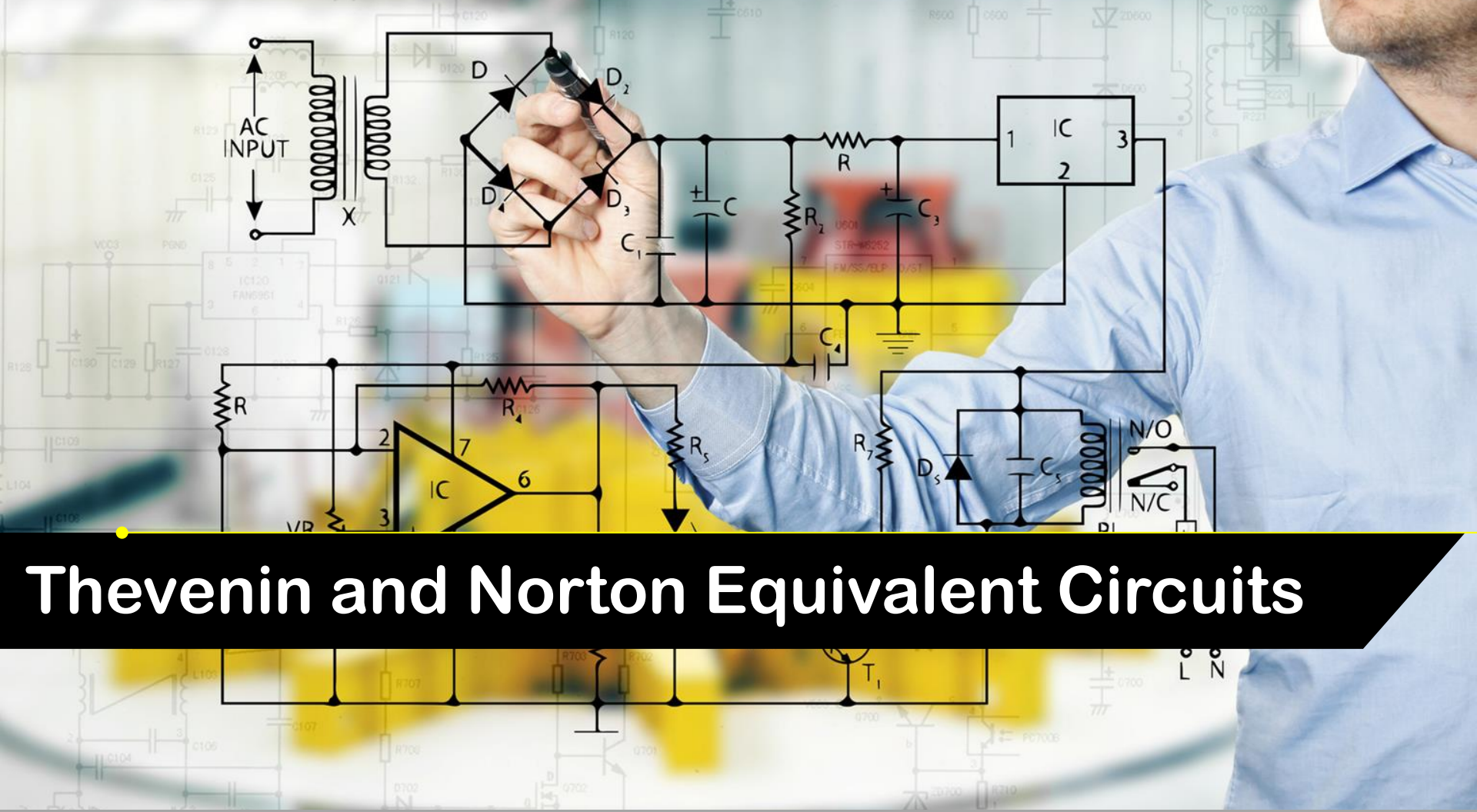

Thevenin and Norton Equivalent Circuits

Thevenin and Norton Equivalent Circuits

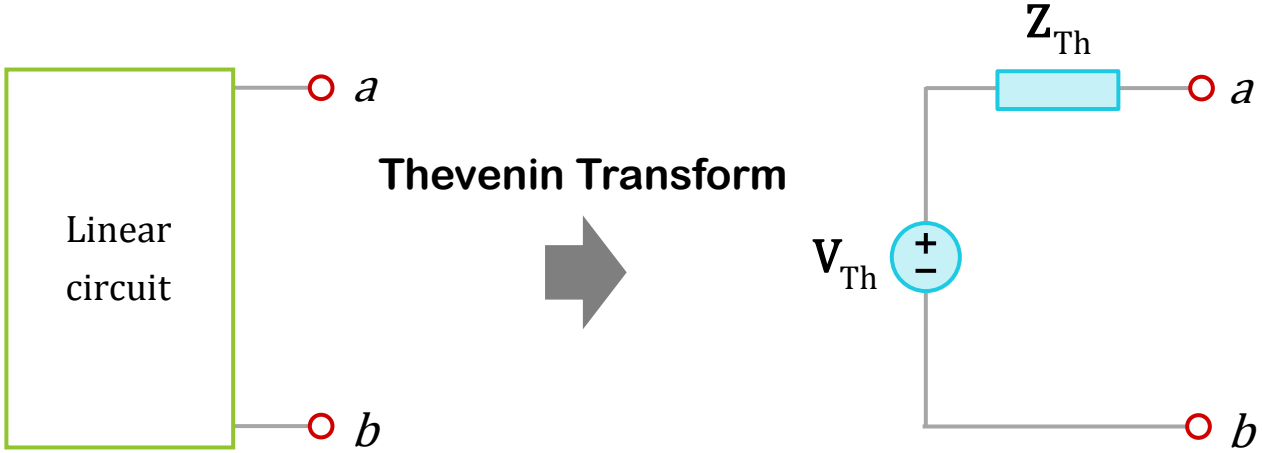

$$V_{Th} = Z_N I_N$$

$$Z_{Th} = Z_N$$

Thevenin and Norton Equivalent Circuits: Example 1

Find the Thevenin equivalent at terminals a-b.

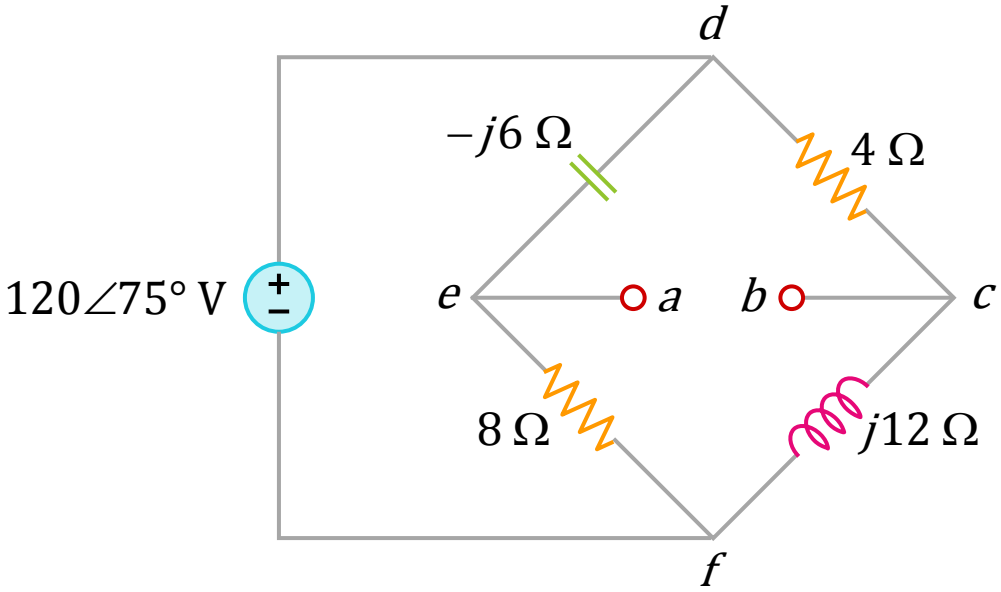

Thevenin and Norton Equivalent Circuits: Example 1

First, find Z_{Th} by setting the voltage source as zero.

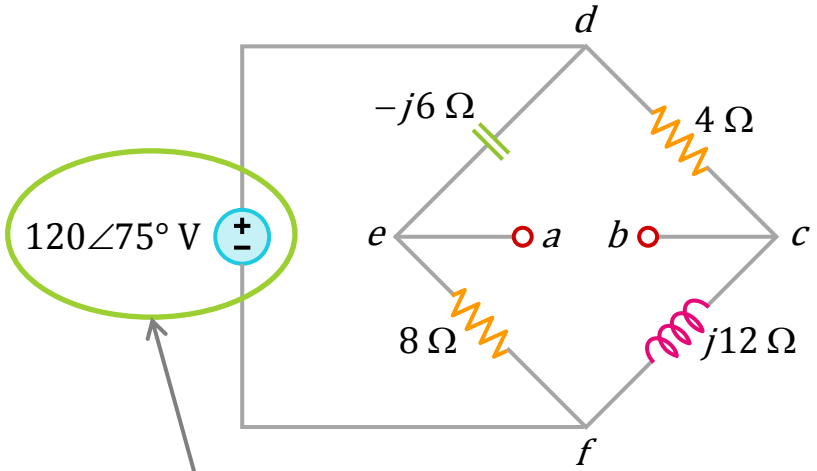

Set to 0

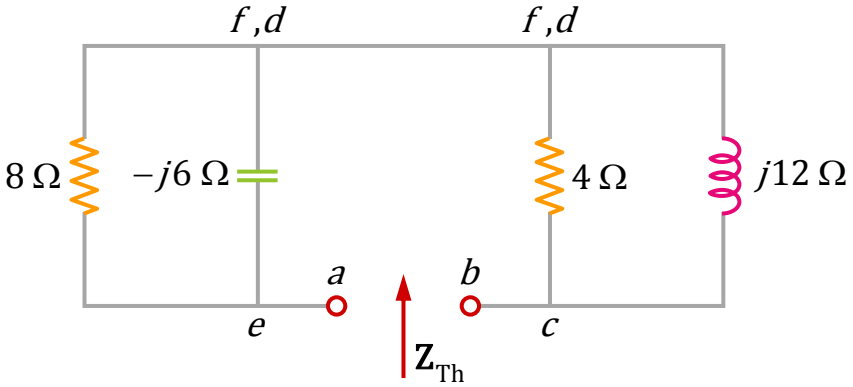

Thevenin and Norton Equivalent Circuits: Example 1

$$\mathbf{Z}_1 = -j6 \,||\, 8 = 2.88 - j3.84\,\Omega$$

$$\mathbf{Z}_2 = 4 \,||\, j12 = 3.6 + j1.2\,\Omega$$

$$\mathbf{Z}_{\text{Th}} = \mathbf{Z}_1 + \mathbf{Z}_2 = 6.48 - j2.64$$

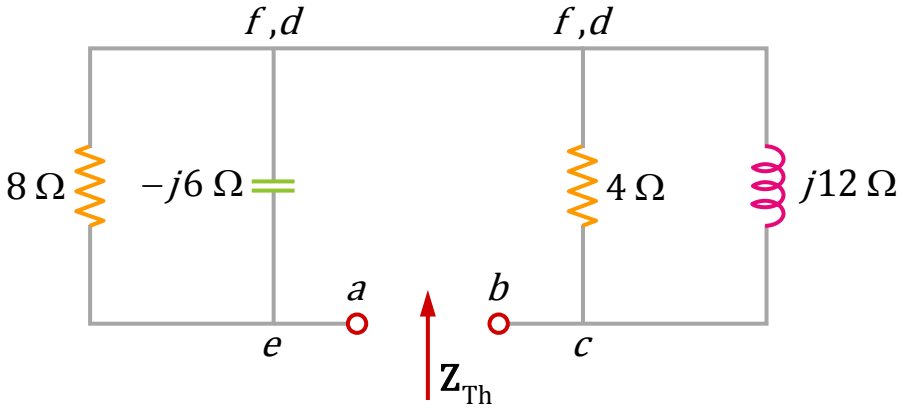

Thevenin and Norton Equivalent Circuits: Example 1

Now, find V_{Th}

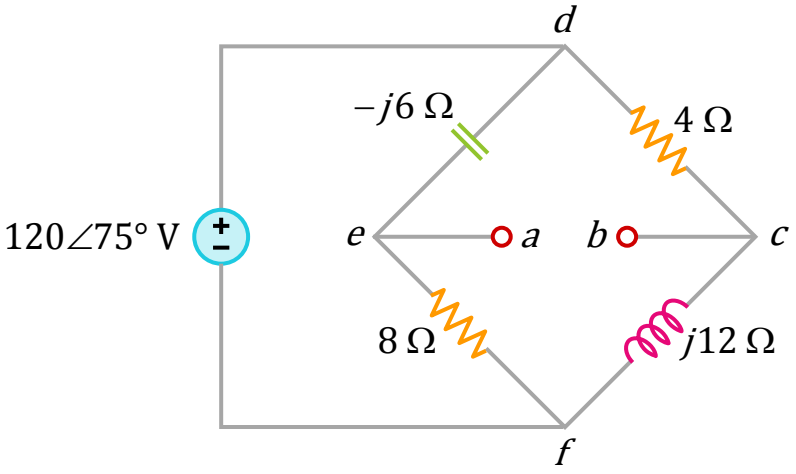

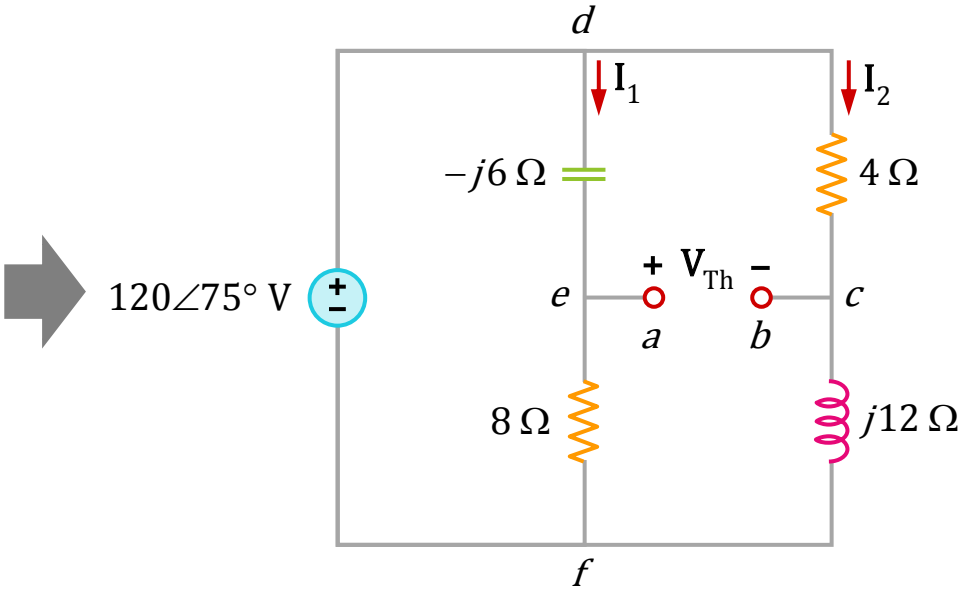

Thevenin and Norton Equivalent Circuits: Example 1

$$\mathbf{I}_1 = \frac{120\angle 75^o}{8 - j6}\,\text{A}$$

$$\mathbf{I}_2 = \frac{120\angle 75^o}{4 + j12}\,\text{A}$$

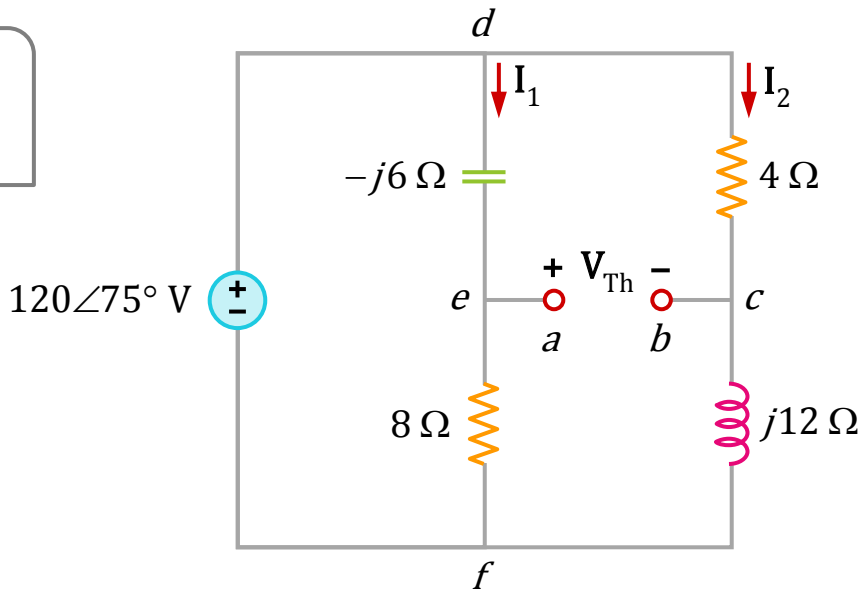

KVL around loop bcdeab

$$\mathbf{V}_{\text{Th}} - 4\mathbf{I}_2 + (-j6)\mathbf{I}_1 = 0$$

$$\mathbf{V}_{\text{Th}} = 37.95\angle 220.31^o\ \text{V}$$

Thevenin and Norton Equivalent Circuits: Example 2

Find I_o using Norton's theorem.

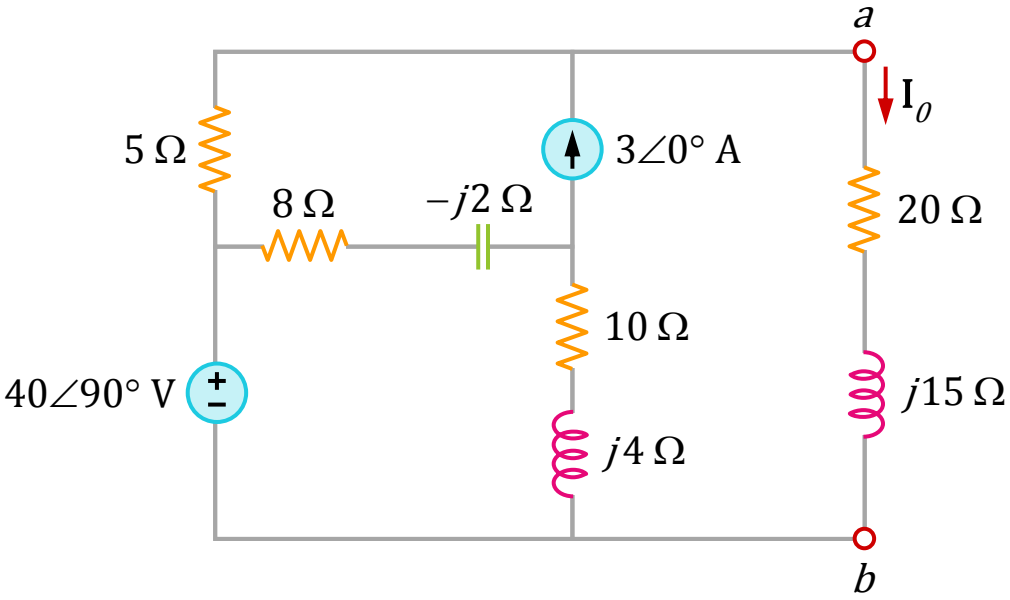

Thevenin and Norton Equivalent Circuits: Example 2

The objective is to first find the Norton's equivalent at terminals a-b.

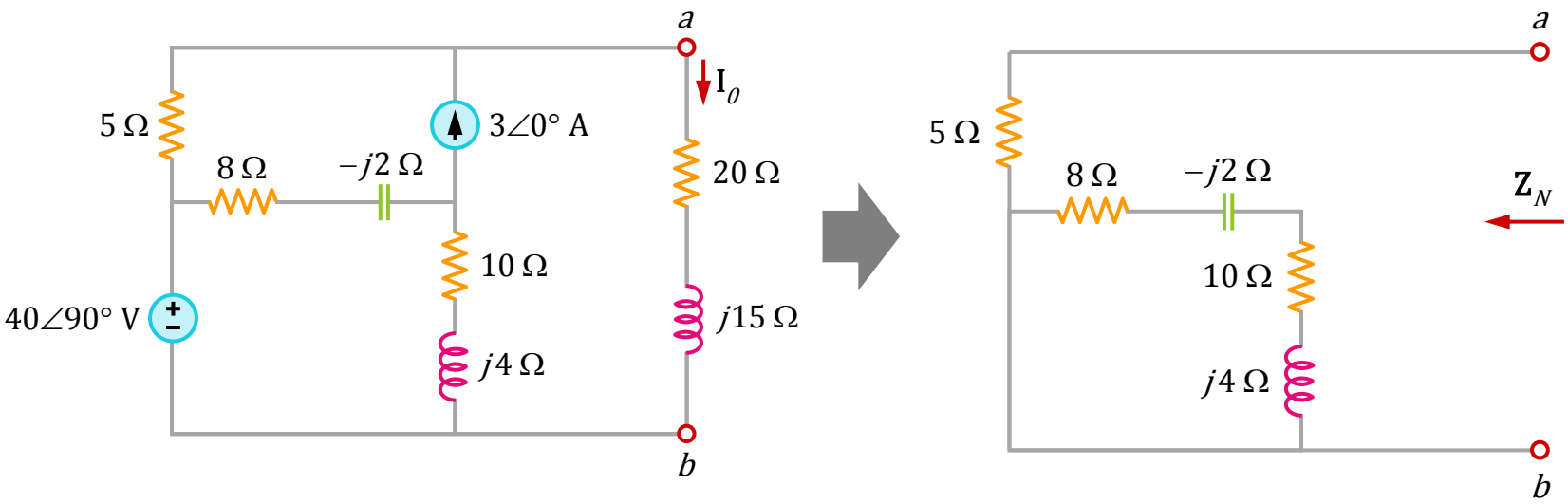

$$\boxed{Z_N = 5\ \Omega}$$

Thevenin and Norton Equivalent Circuits: Example 2

To get I_N, we short-circuit terminals a-b and apply mesh analysis.

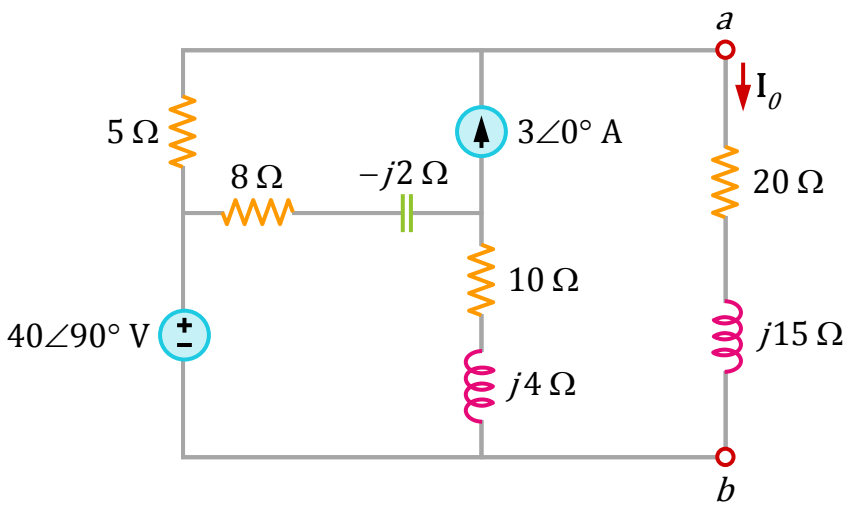

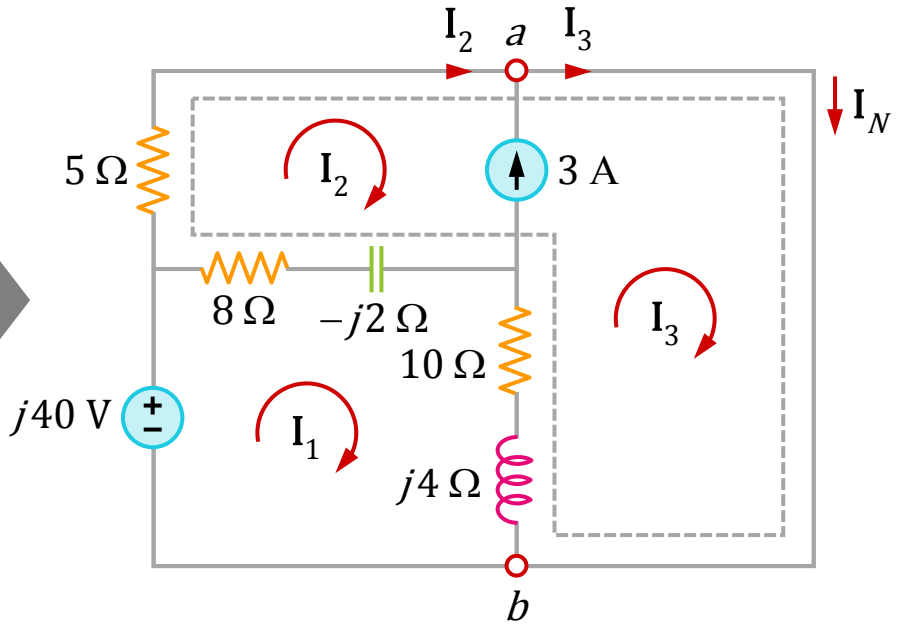

Thevenin and Norton Equivalent Circuits: Example 2

For mesh 1

$$-j40+(18+j2)\mathrm{I}_1-(8-j2)\mathrm{I}_2-(10+j4)\mathrm{I}_3=0$$

For supermesh

$$(13-j2)\mathrm{I}_2+(10+j4)\mathrm{I}_3-(18+j2)\mathrm{I}_1=0$$

At node a

$$\mathrm{I}_3=\mathrm{I}_2+3$$

Solving the Norton current

$$\mathrm{I}_N=\mathrm{I}_3=(3+j8)\,\mathrm{A}$$

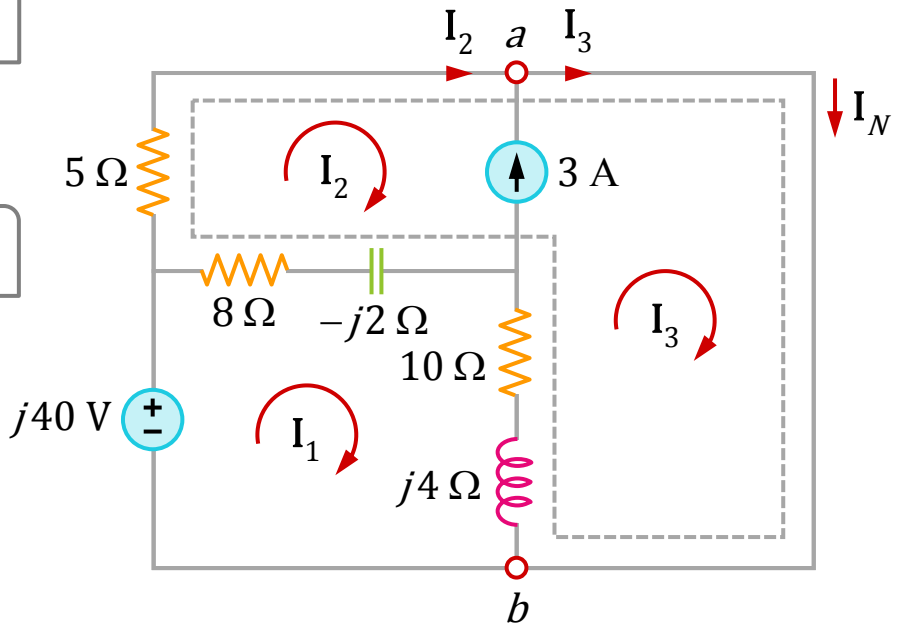

Thevenin and Norton Equivalent Circuits: Example 2

$$\mathbf{Z}_N = 5\ \Omega$$

$$\mathbf{I}_N = \mathbf{I}_3 = (3 + j8)\ \mathrm{A}$$

The Norton equivalent circuit along with the impedance at terminals a-b,

$$\mathbf{I}_o = \frac{5}{5 + 20 + j15}\mathbf{I}_N$$

$$\mathbf{I}_o = 1.465\angle 38.48^o\ \mathrm{A}$$

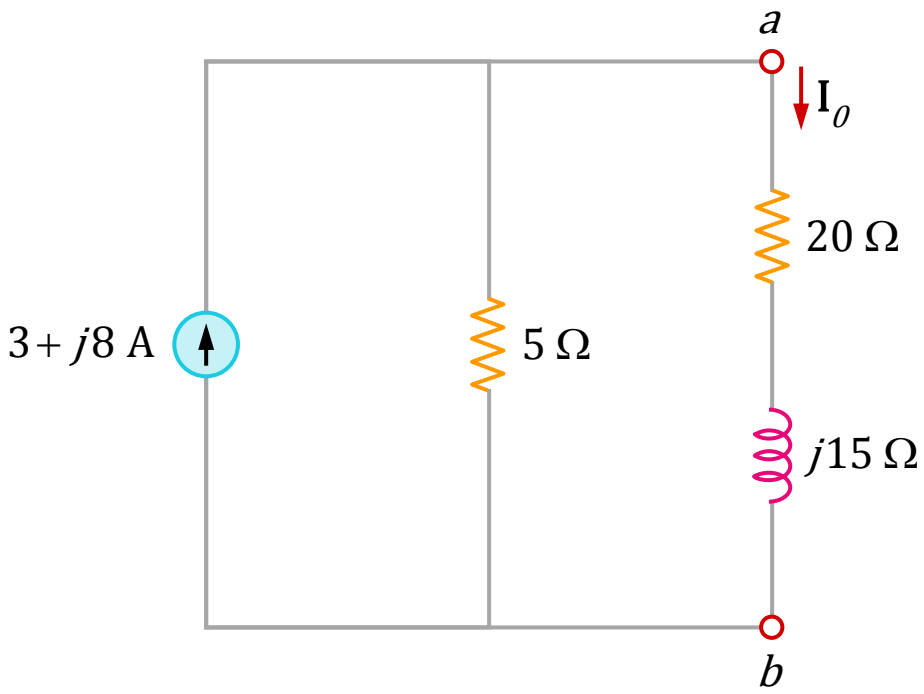

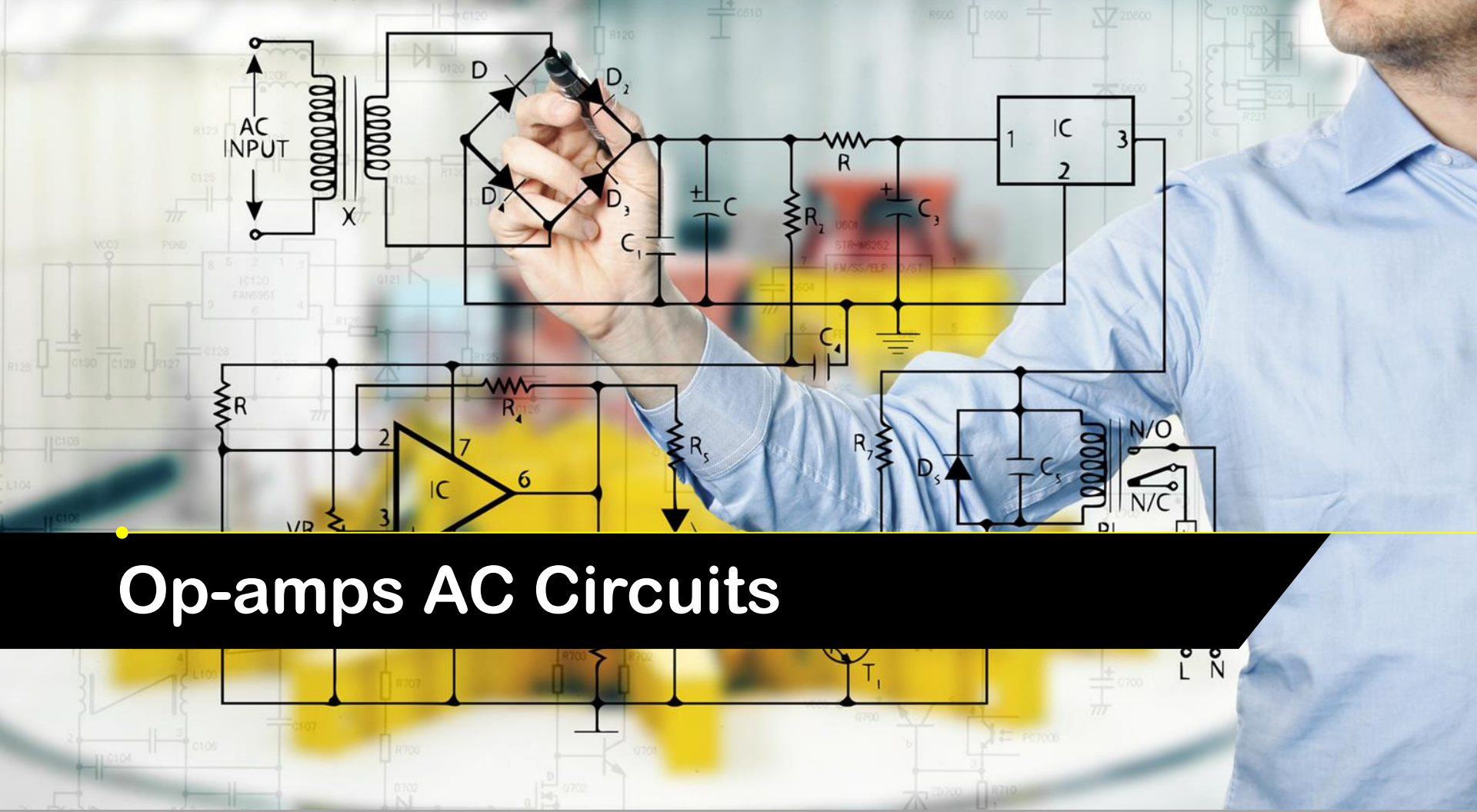

Op-amps AC Circuits

Op-amps AC Circuits

Ideal op-amps assumed:

- **No current enters either of its input terminals.**
- **The voltage across its input terminals is zero.**

Op-amps AC Circuits: Example 1

Find $v_o(t)$ if $v_s(t) = 3\cos 1000t$ V.

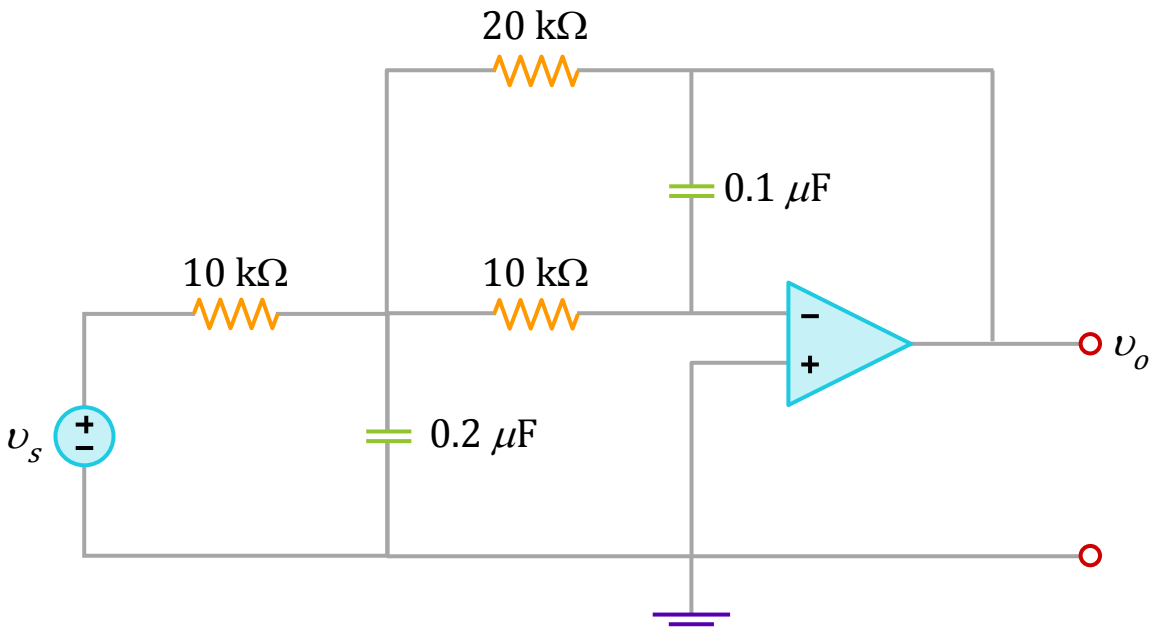

$$\mathbf{V}_s = 3\angle 0^o$$

$$\omega = 1000$$

Op-amps AC Circuits: Example 1

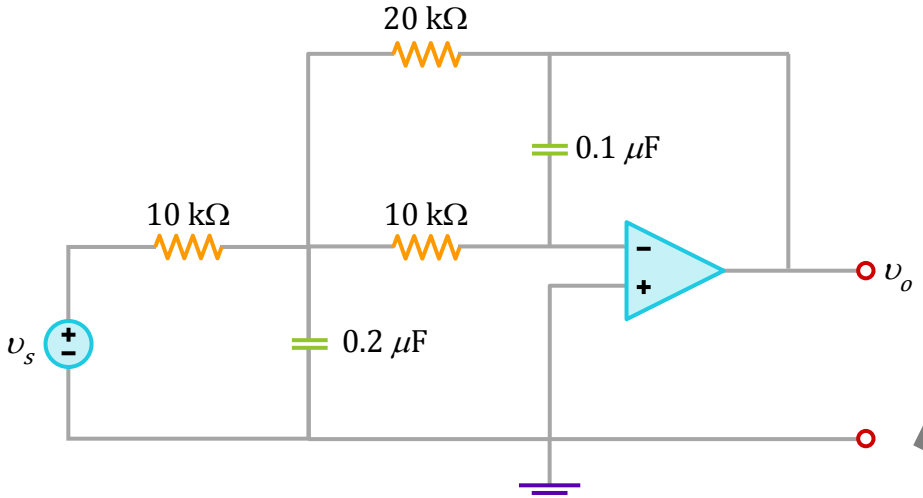

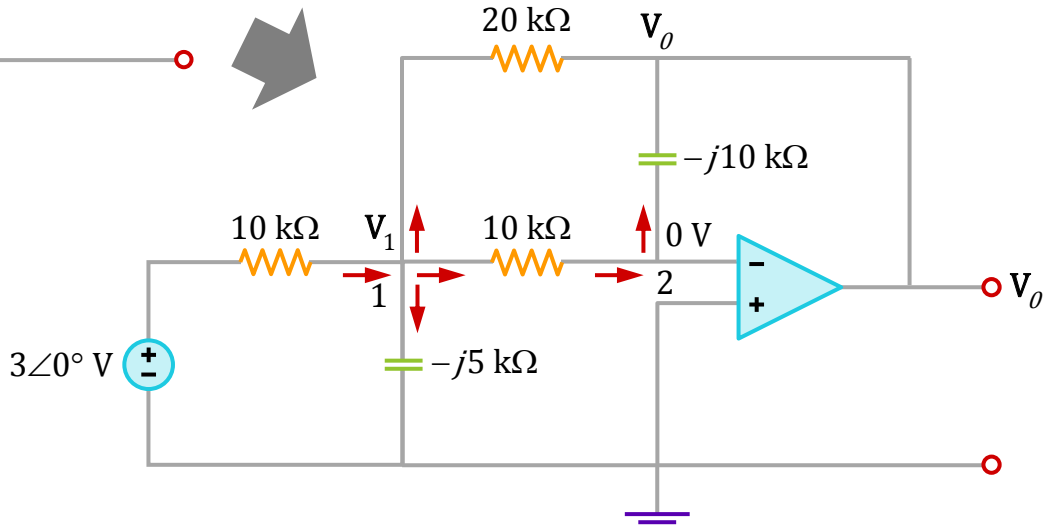

Op-amps AC Circuits: Example 1

KCL at node 1

$$\frac{3\angle 0^o - \mathbf{V}_1}{10} = \frac{\mathbf{V}_1}{-j5} + \frac{\mathbf{V}_1 - 0}{10} + \frac{\mathbf{V}_1 - \mathbf{V}_0}{20}$$

$$6 = (5 + j4)\mathbf{V}_1 - \mathbf{V}_o$$

KCL at node 2

$$\frac{\mathbf{V}_1 - 0}{10} = \frac{0 - \mathbf{V}_o}{-j10}$$

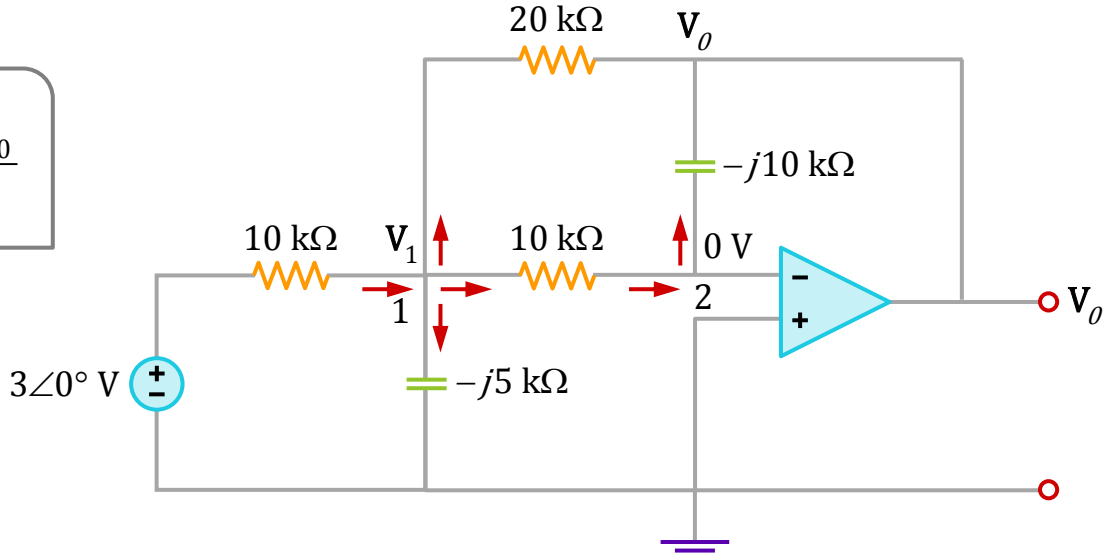

Solving

$$\mathbf{V}_o = 1.029\angle 59.04^o$$

$$v_o(t) = 1.029\cos(1000t + 59.04^o)\,\text{V}$$

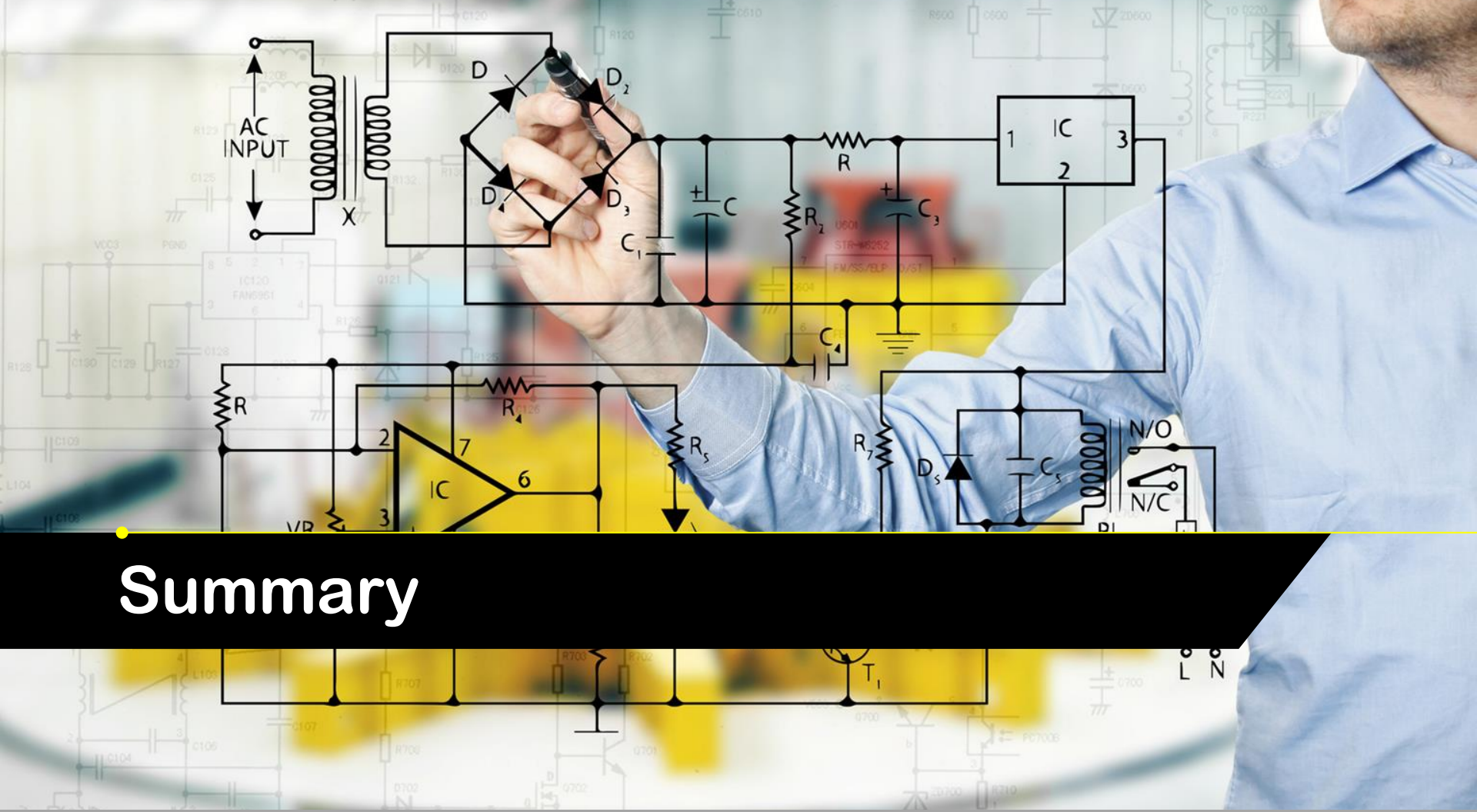
AC
INPUT
X
D
D2
D4
D3
C1
C
R2
R
C3
IC
1
2
3
C4
R
R4
2
7
IC
6
3
R5
R7
D5
C5
N/O
N/C
T1
L
N

Summary

Summary

- We apply nodal and mesh analysis to AC circuits by applying KCL and KVL to the phasor form of the circuits.

- For circuit that has independent sources with different frequencies, each independent source must be considered separately - apply the superposition theorem.

- A separate phasor circuit for each frequency must be solved independently, and the corresponding response should be obtained in the time domain. The overall response is the sum of all the time responses of all the individual phasor circuits.

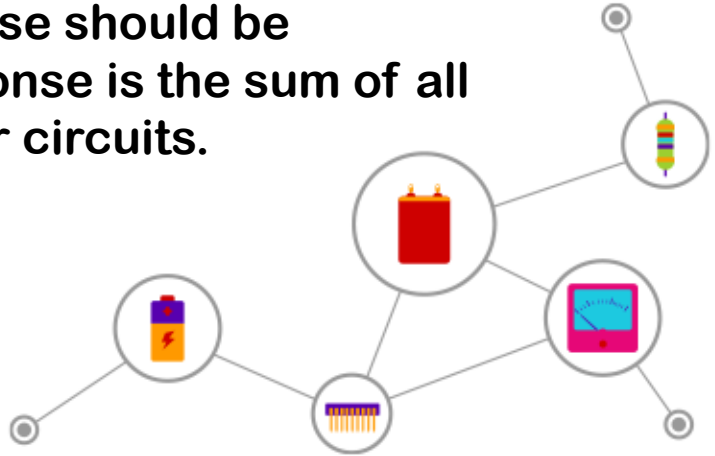

Summary
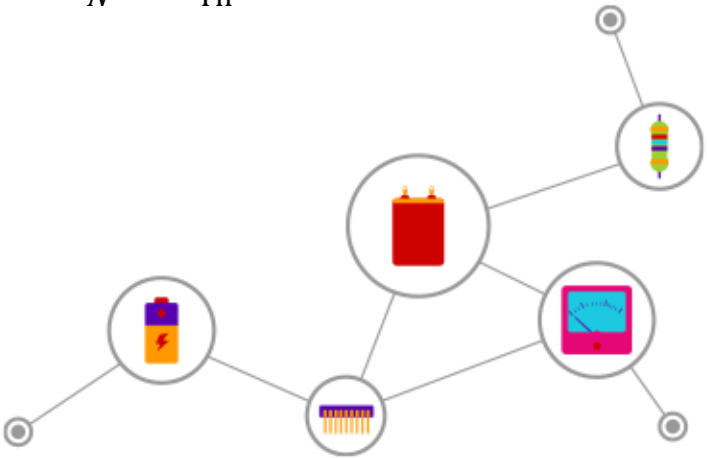
- The concept of source transformation is also applicable in the frequency domain.
- The Thevenin equivalent of an AC circuit consists of a voltage source $\mathbf{V}_{\mathrm{Th}}$ in series with the Thevenin impedance $\mathbf{Z}_{\mathrm{Th}}$.
- The Norton equivalent of an AC circuit consists of a current source $\mathbf{I}_N$ in series with the Norton impedance $\mathbf{Z}_N = \mathbf{Z}_{\mathrm{Th}}$.